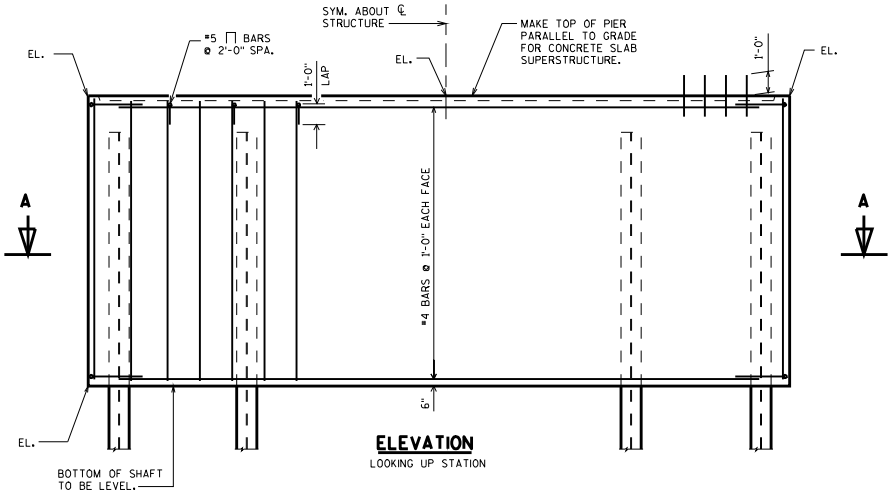


**ELEVATION**

LOOKING UP STATION

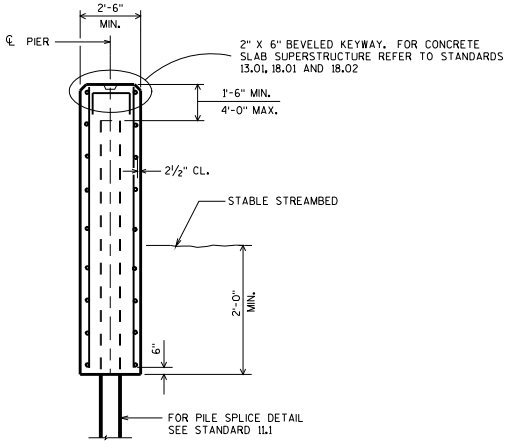


**END VIEW**

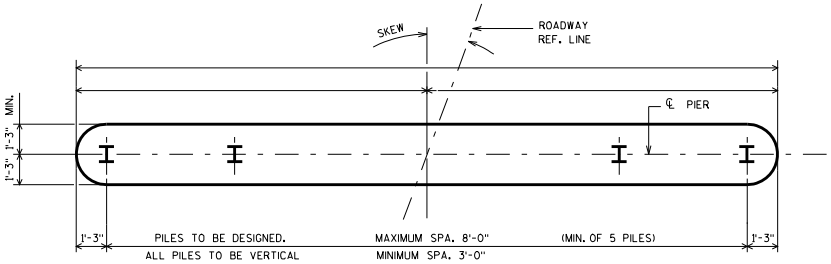


**PLAN**

STEEL PILING SHOWN. CAST IN PLACE CONC. PILING LAYOUT SIMILAR.

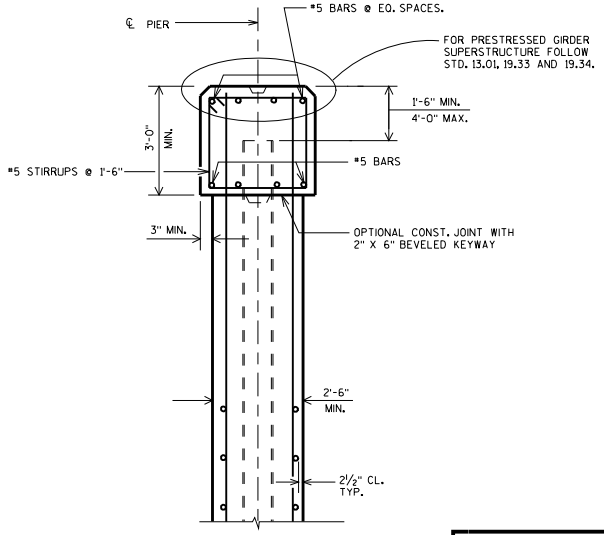


**CAP TYPE DETAIL**

USE WHEN ECONOMICAL FOR GIRDERS ON LARGE SKEWS.

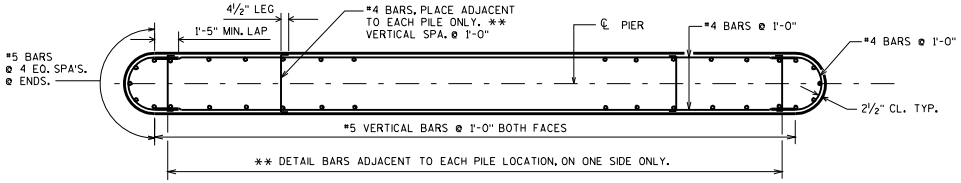


**SECTION A**

| PILE ENCASED PIER | |
|---|---|
| STATE OF WISCONSIN<br>DEPARTMENT OF TRANSPORTATION<br>STRUCTURES DEVELOPMENT SECTION | |
| APPROVED: Scot Becker | DATE: 7-08 |

**STANDARD 13.03**