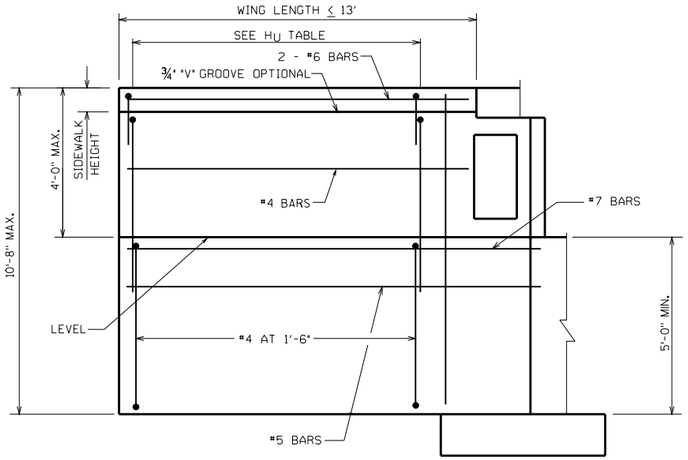

WING WITHOUT PILE ELEVATION

(FRONT FACE)

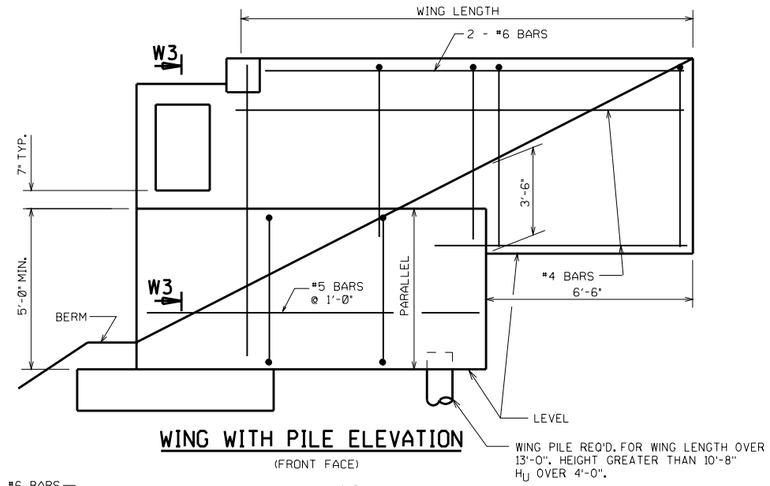

WING WITH PILE ELEVATION

(FRONT FACE)

DESIGNER NOTES

LENGTH OF A3 BARS SHALL BE ≥ TO WING LENGTH.

WING WITH PILE & WING WITHOUT PILE CAN BE USED FOR EITHER SIDEWALK OR SLOPED FACE PARAPETS. THE TYPE OF WING TO USE IS BASED ONLY ON THE WING HEIGHT AND WING LENGTH LIMITATIONS SHOWN.

LAP LENGTH FOR HORIZONTAL BARS SHALL BE BASED ON A "CLASS C" TOP TENSION LAP SPLICE.

ALL WING BARS SHALL BE EPOXY COATED.

WHEN TYPE "F", "W", OR "M" RAILING IS USED, LOCATE NAME PLATE ON FIRST RIGHT WING TRAVELING UP STATION.

FRONT ROW PILES ARE DESIGNED FOR AN EQUIVALENT FLUID PRESSURE OF 40 P.S.F. AND SUPERSTRUCTURE REACTIONS "P". BACK ROW PILE DESIGN IS BASED ON AN EQUIVALENT FLUID PRESSURE OF 20 P.S.F. AND "P".

FOR MODULAR EXPANSION JOINTS W/CONC. DIAPH. RUNNING TO EDGE OF DECK: IF SIDEWALL IS USED, FORM SIDEWALL 2" BELOW CONC. DIAPH.

DESIGN LOADS

HORIZONTAL EARTH LOAD = 33 P.S.F.
EQUIV. FLUID PRESSURE.
LIVELOAD = 2' SURCHARGE
LOAD FACTOR (WINGS) = 1.3 (5/3 LL + 5/3 E)
LOAD FACTOR (BODY) = 1.3 (5/3 LL+ 1.3 E)
f_y = 60,000 P.S.I.
f'c = 3,500 P.S.I.

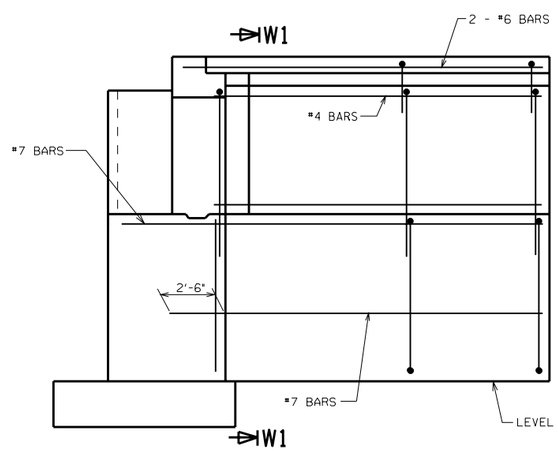

WING WITHOUT PILE ELEVATION

(BACK FACE)

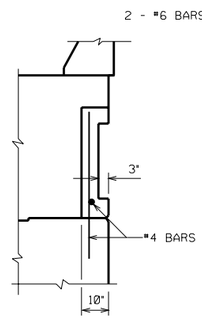

SECTION W3

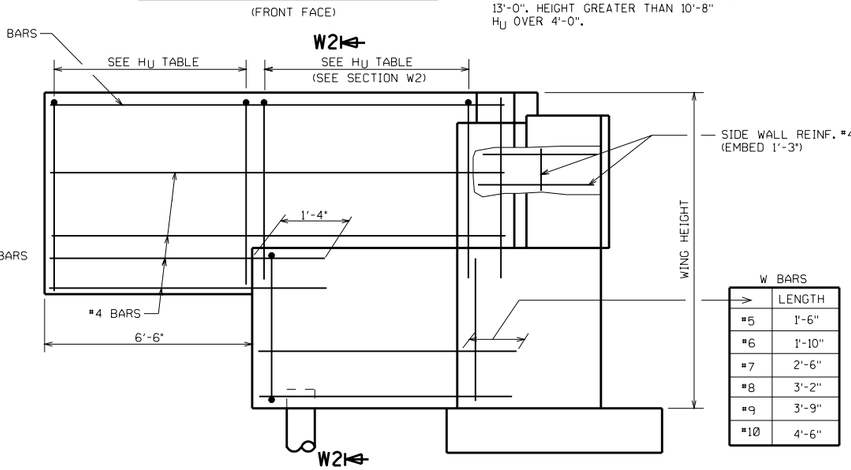

W BARS	
→	LENGTH
#5	1'-6"
#6	1'-10"
#7	2'-6"
#8	3'-2"
#9	3'-9"
#10	4'-6"

WING WITH PILE ELEVATION

(BACK FACE)

TABLE A

WING 2 LENGTH	WING 2 HEIGHT 10'-0"	11'-6"	13'-0"	14'-6"	BARS
12'-0"	—	5-#5	—	—	W
	—	6-#5	—	—	A3
16'-0"	5-#6	6-#6	5-#7	—	W
	6-#6	4-#8	6-#7	—	A3
20'-0"	6-#7	5-#8	6-#8	7-#8	W
	4-#9	5-#9	6-#9	7-#9	A3
24'-0"	6-#9	7-#9	7-#10	8-#10	W
	8-#8	8-#9	8-#10	9-#10	A3
26'-0"	6-#10	7-#10	6-#10 *	7-#10 *	W
	6-#10	8-#10	8-#10 **	9-#10 **	A3

* USE 4'-6" FOR LOWER WING POUR WIDTH
** USE 3'-3" MIN. FOR BEARING SEAT WIDTH

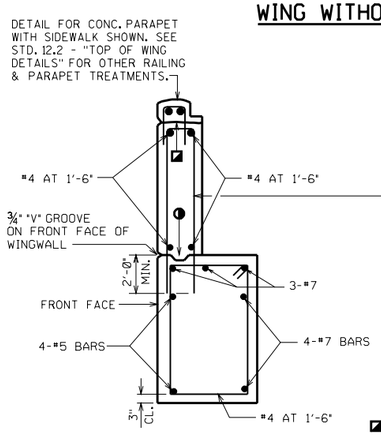

SECTION W1

WING WITHOUT PILE

OPTIONAL CONST. JOINT FORMED BY BEVELED 2" x 6" KEYWAY WITH MEMBRANE ON BACKFACE.

HU	STEEL RAIL	CONC. RAIL
≤ 7'-0"	#6 @ 9"	#5 @ 1'-0"
7'-0"-9'-0"	#6 @ 9"	#5 @ 6"

CONSTRUCTION JOINT, LEAVE ROUGH. REQUIRED FOR PRESTRESSED CONCRETE SUPERSTRUCTURES. OPTIONAL FOR OTHERS. POUR CONCRETE ABOVE THIS JOINT AFTER DECK IS IN PLACE.

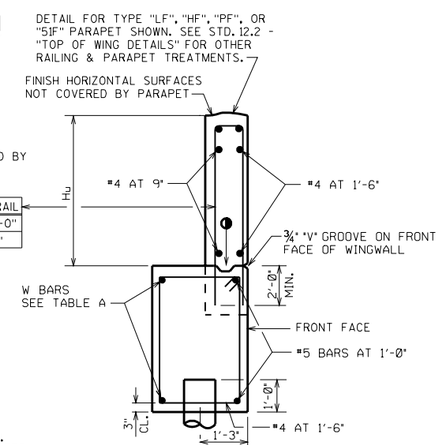

SECTION W2

WING WITH PILE

ABUTMENT TYPE A3

STATE OF WISCONSIN
DEPARTMENT OF TRANSPORTATION
STRUCTURES DEVELOPMENT SECTION

APPROVED: Stanley W. Woods

DATE: 7-04