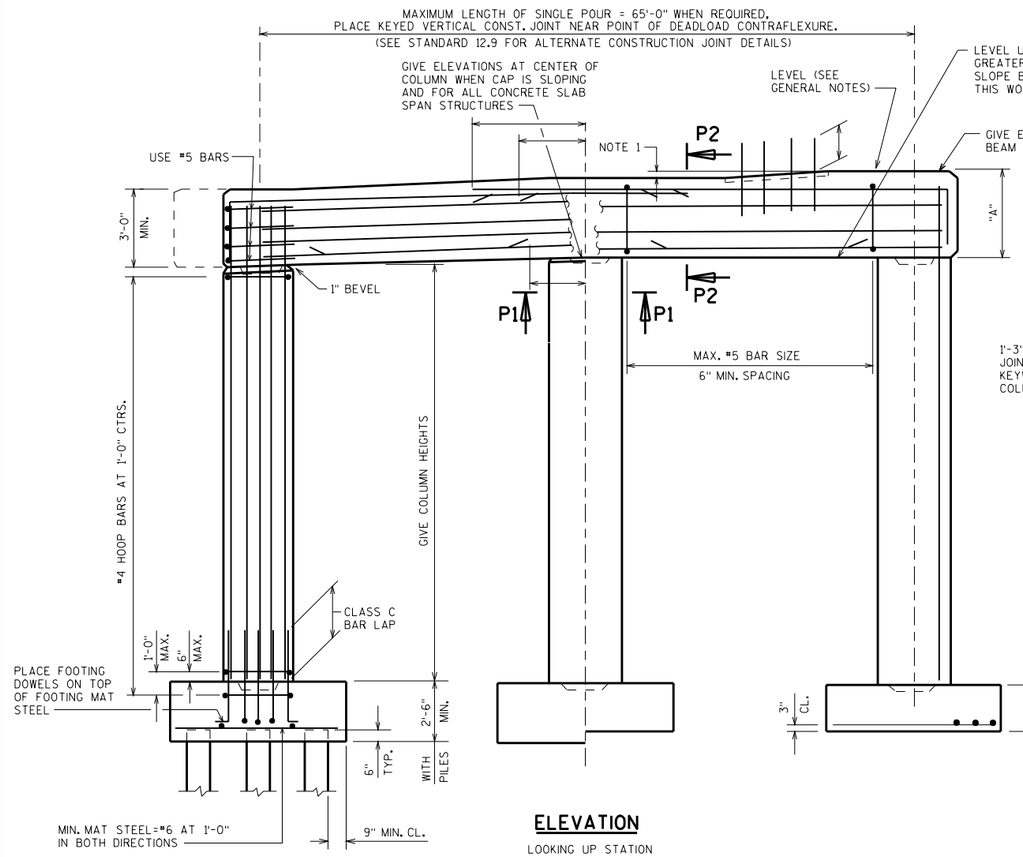

ELEVATION

LOOKING UP STATION

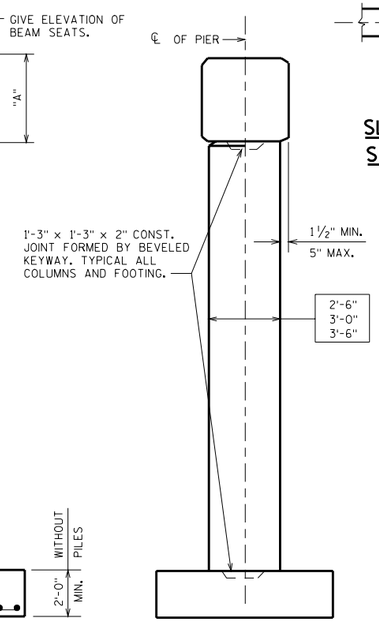

END VIEW

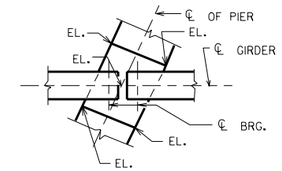

SLOPING BEAM SEAT DETAILS

GENERAL NOTES

SLOPE TOP OF COLUMNS TO MATCH CAP WHEN THE BOTTOM OF THE CAP IS SLOPED. DETAIL BOTTOM OF CAP REINFORCEMENT TO CLEAR VERTICAL COLUMN REINFORCEMENT.

CAPS MAY BE MORE THAN 3" WIDER THAN COLUMNS IF THE EXTRA WIDTH IS NECESSARY TO SATISFY THE MINIMUM EDGE DISTANCE CRITERIA ADJACENT TO BEARINGS

BEARING SEAT AREAS SHALL BE LEVEL EXCEPT FOR THE TWO CASES LISTED BELOW:

1. FOR GIRDERS WITH 1/2" ELASTOMERIC BEARING PADS WHEN THE BOTTOM OF THE GIRDERS SLOPE MORE THAN 1%.

2. WHEN A CAP IS USED FOR CONCRETE SLAB SUPERSTRUCTURES MAKE THE TOP OF THE CAP PARALLEL TO GRADE. SEE STANDARD 18.1

SEE BRIDGE MANUAL FOR ADDITIONAL REINFORCING STEEL IN BEARING AREA FOR BEAM SEATS OF NON-SLOPED CAPS THAT ARE 4" OR MORE ABOVE LOWEST BEAM SEAT.

NOTE 1 MINIMUM STEP TO BE 0.02 FT. FOR ELASTOMERIC BEARING PADS AND 0.04 FT. FOR STEEL BEARINGS. IF LESS DETAIL ELASTOMERIC BEARINGS AT SAME ELEVATION AS THE LOWER BEARING, OR DETAIL STEEL SHIM PLATE FOR STEEL BEARING, SHOW LOCATION AND SIZE OF SHIM IN "PLAN VIEW".

EPOXY COAT BAR STEEL DOWN TO TOP OF FOOTINGS IN ALL PIERS UNDER EXPANSION JOINTS & MEDIAN PIERS AT GRADE SEPARATIONS WHERE ADT UNDER THE BRIDGE IS GREATER THAN 3,500.

BAR STEEL REQUIRED FOR BENDING IN PIER CAP SHALL BE DETAILED IN LENGTHS AS REQUIRED FOR CONSTRUCTIBILITY AND BY DESIGN SPECIFICATIONS. MAXIMUM REQUIRED BAR STEEL IN THE TOP OF THE PIER CAP (NEGATIVE MOMENT STEEL) MAY BE DETAILED FULL LENGTH IF A MINOR COST INCREASE.

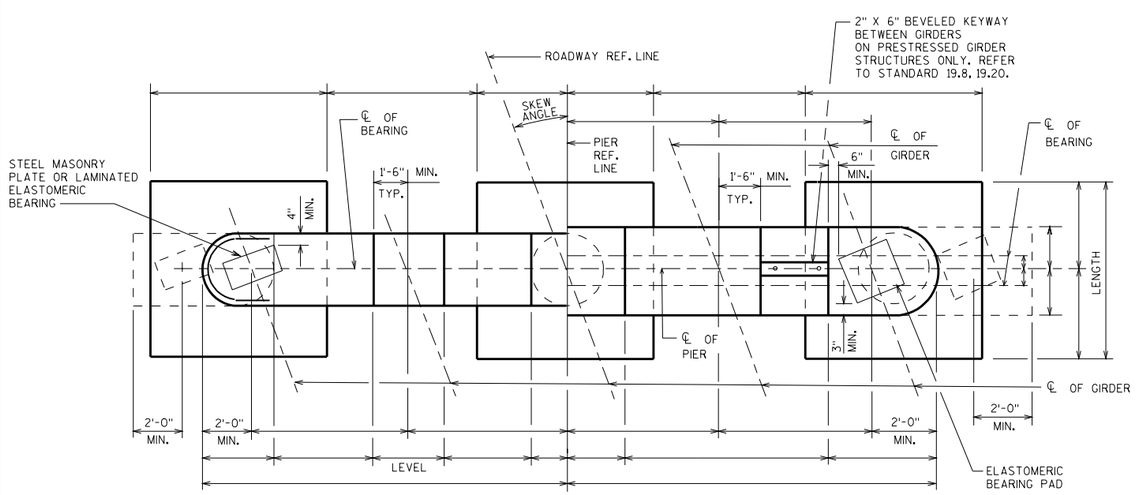

PLAN

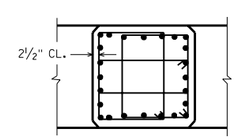

ALTERNATE SECTION P1

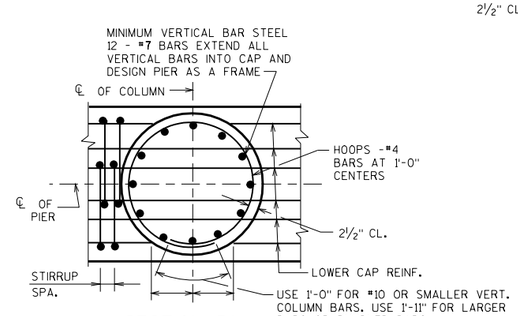

SECTION P1

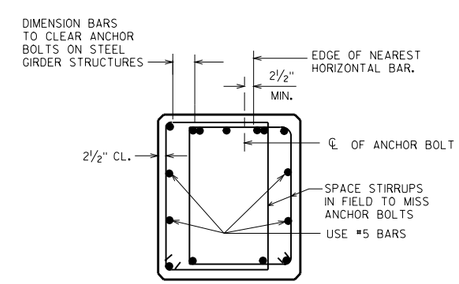

SECTION P2

MULTI-COLUMNED PIERS

STATE OF WISCONSIN
DEPARTMENT OF TRANSPORTATION
STRUCTURES DEVELOPMENT SECTION

APPROVED: Stanley W. Woods

DATE: 7-04

STANDARD 13.1