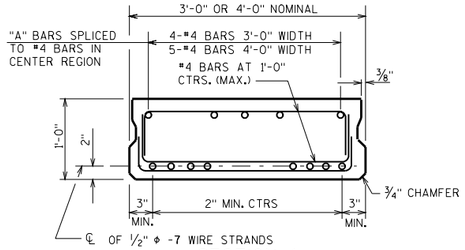

SECTION 1

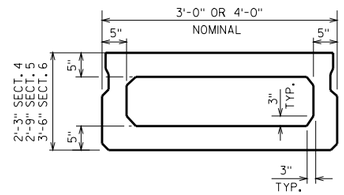

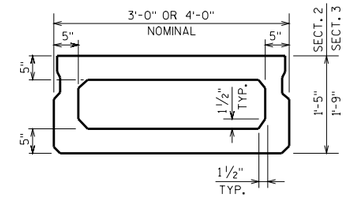

SECTIONS 2 THRU 6

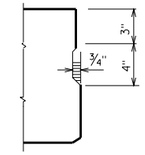

SHEAR KEY

OMIT SHEAR KEY ON EXTERIOR FACE OF EXTERIOR GIRDERS.

(SEE "CROSS SECTION" VIEW)

SECT NO.	DEPTH	"A"	"B"
1	1'-0"	7 1/2"	7 1/2"
2	1'-5"	9"	1'-0"
3	1'-9"	1'-0"	1'-4"
4	2'-3"	1'-3"	1'-10"
5	2'-9"	1'-3"	2'-4"
6	3'-6"	1'-3"	3'-1"

SEE CHAPTER 19 OF THIS MANUAL FOR POLICY ON SELECTING 3'-0" SECTIONS OR 4'-0" SECTIONS.

NOTES

FOUR WAY SLING MUST BE USED TO ENGAGE ALL 4 LIFTING DEVICES ON BOTH ENDS OF UNITS.

STRANDS SHALL BE FLUSH WITH END OF UNIT.

VOIDS SHALL BE VENTED AND DRAINED BY CASTING A 1" Φ TUBE AT EACH END AND CENTER OF VOID SEGMENT.

SLOPE BEAM SEATS TO MATCH ROADWAY CROWN.

SLOPE BEAM SEATS PARALLEL TO GRADE LINE IF GRADE AT BRG. > 1%. PLACE ELEVATIONS ON PLANS TO MEET THESE REQUIREMENTS.

POST-TENSIONING OF THE TRANSVERSE TENDONS SHALL NOT BEGIN UNTIL THE GROUT BETWEEN THE PRECAST BEAMS HAS BEEN ALLOWED TO CURE FOR 48 HOURS.

BAR STEEL REINFORCEMENT SHALL BE GRADE 60. (FY=60 K.S.I.).

PRESTRESSING STEEL ULTIMATE STRENGTH = 270 K.S.I..

PRESTRESSED CONCRETE STRENGTH AT 28 DAYS = 5.0 K.S.I..

THE CEMENT AND FINE AGGREGATE FOR THE GROUT BETWEEN THE POST-TENSIONED BEAMS SHALL BE PROPORTIONED BY WEIGHT AS INDICATED IN THE FOLLOWING TABLE. THE CEMENT USED SHALL BE TYPE 1. WATER SHALL BE ADDED IN AMOUNTS AS NECESSARY TO OBTAIN APPROXIMATELY A 5" SLUMP OR TO A CONSISTENCY TO INSURE THAT THE VOIDS ARE COMPLETELY FILLED. THE GROUT SHALL BE RODDED TO INSURE THAT THE VOIDS ARE COMPLETELY FILLED.

CEMENT PER CU. YD.	FINE AGGREGATE PER CU. YD.
920 LBS.	2350 LBS. SSD AT 2.65 SPECIFIC GRAVITY

THE MAXIMUM ALLOWABLE SKEW ANGLE OF THE STRUCTURE SHALL BE 45°.

ABUTMENT BACKWALLS AND CONCRETE OVERLAY SHALL NOT BE POURED UNTIL AFTER THE POST-TENSIONING HAS BEEN COMPLETED.

SEAL WASHER SHALL BE SPONGE NEOPRENE GASKET 2 1/2" MIN. THICK. STRESS POCKETS SHALL BE FILLED WITH CHLORIDE FREE NON-SHRINK GROUT AFTER POST-TENSIONING (REFER TO SPECIAL PROVISION FOR NON-SHRINK GROUT SPECIFICATIONS.)

TRANSITION BETWEEN CHANGING SLOPES OF POST-TENSIONING DUCTS SHALL BE PROVIDED BY EITHER A CIRCULAR OR PARABOLIC CURVE WITH A MINIMUM LENGTH OF 3'-0".

POST-TENSIONING DUCTS SHALL BE PRESSURE GROUTED FROM ONE GROUT PIPE UNTIL ALL ENTRAPPED AIR IS EXPELLED AND GROUT BEGINS TO FLOW FROM THE OPEN GROUT PIPE. THE OPEN GROUT PIPE SHALL BE CLOSED AND A PRESSURE OF 50 PSI MAINTAINED FOR 15 SECONDS. THE GROUT COMPOSITION SHALL BE 94 LBS. OF TYPE 1 CEMENT, 5 GALLONS OF WATER AND 1 LB. OF APPROVED PLASTICIZER OR A PRE-MIXED PACKAGED GROUT APPROVED BY THE STRUCTURES DESIGN SECTION.

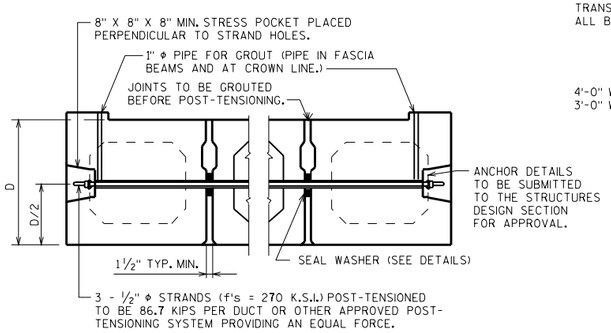

POST-TENSIONING DETAILS

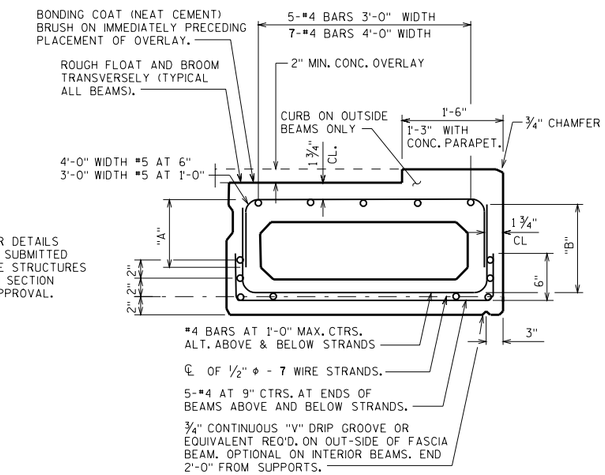

CROSS SECTION

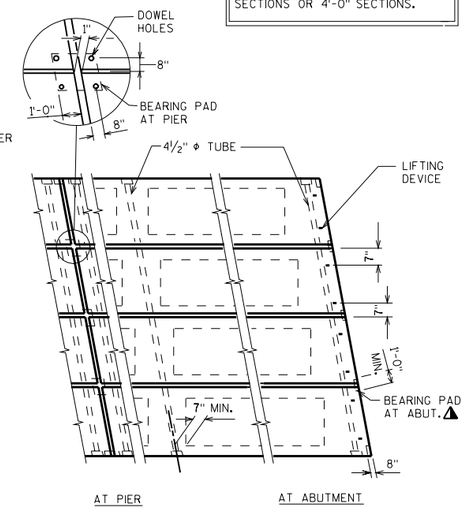

TYPICAL PLAN

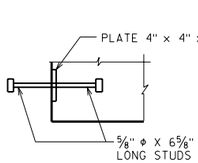

WELD PLATE DETAIL

(EQUIVALENT TO ONE #4 BAR)

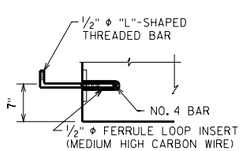

LOOP INSERT DETAIL

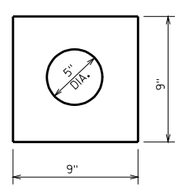

SEAL WASHER

(MAY ALSO BE ROUND)

LEGEND

* WHEN WINGS ARE PARALLEL TO ABUTMENT ℄, CHOOSE THESE DIMENSIONS TO ALLOW FOR EASE OF POST-TENSIONING OPERATION.

◪ MINIMUM INSTALLATION WIDTH PLUS 1/4".

◭ PLACE 3/4" FILLER BETWEEN BEARING PADS.

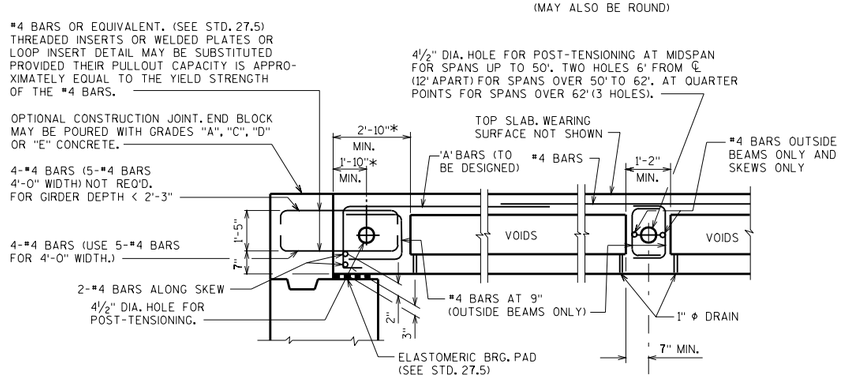

AT ABUTMENTS

TYPICAL LONGITUDINAL SECTION

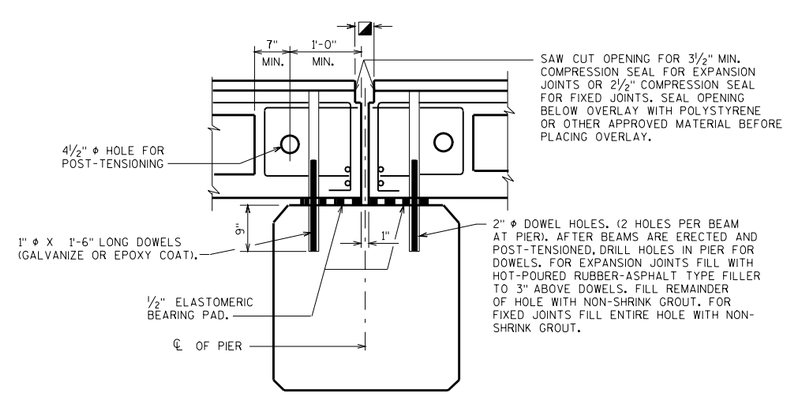

LONGITUDINAL SECTION AT PIER

PRETENSIONED SLAB & BOX SECTIONS POST-TENSIONED TRANSVERSELY

STATE OF WISCONSIN
DEPARTMENT OF TRANSPORTATION
STRUCTURES DEVELOPMENT SECTION

APPROVED: Stanley J. Tikkanen | DATE: 1-02

STANDARD 19.15