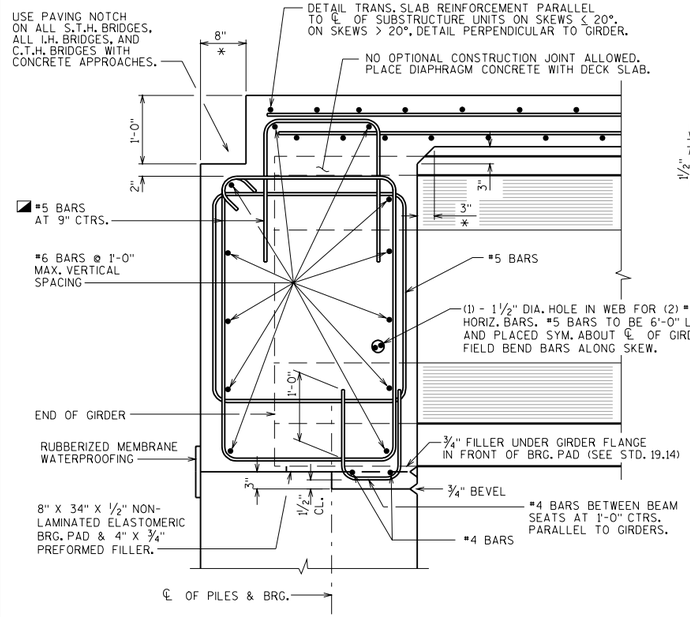

PRESTRESSED GIRDER WITH SEMI-EXPANSION SEAT

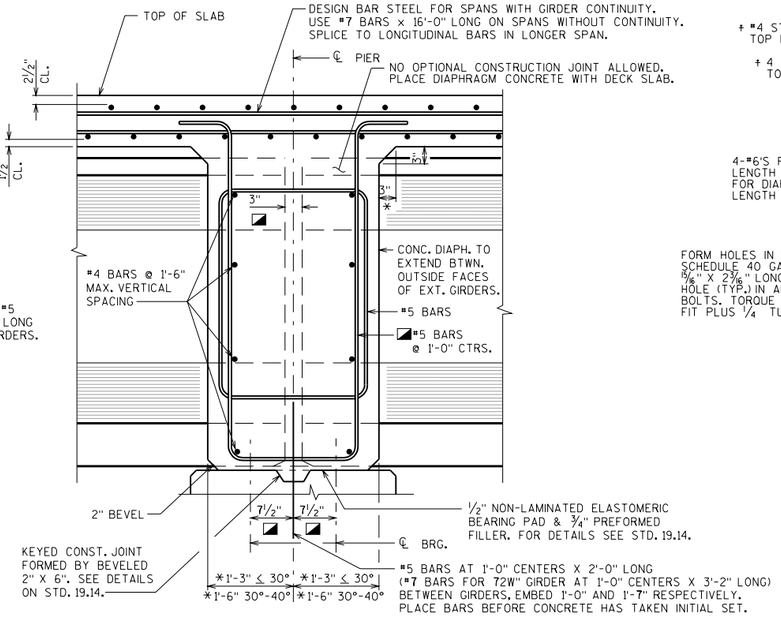

DIAPHRAGM AT ½" ELASTOMERIC BEARING

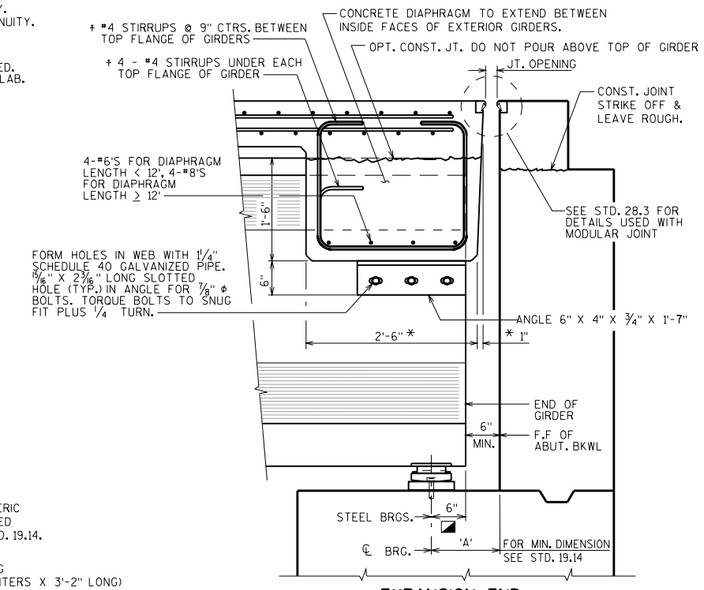

EXPANSION END

0° SKEW SHOWN (NON 0° SKEW SHOWN IN TOP VIEW)

LEGEND

- * DIMENSION IS TAKEN NORMAL TO ℄ SUBSTRUCTURE UNITS.
- ◪ DIMENSION IS TAKEN PARALLEL TO ℄ GIRDER.
- + SPACING PERPENDICULAR TO ℄ GIRDERS

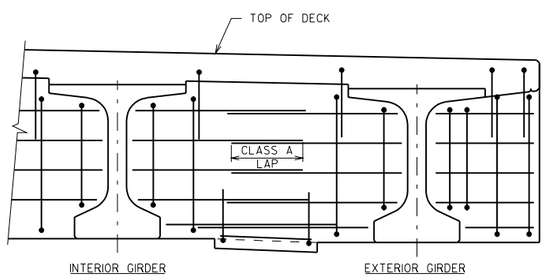

PART TRANSVERSE SECTION AT DIAPHRAGM SEMI EXPANSION END

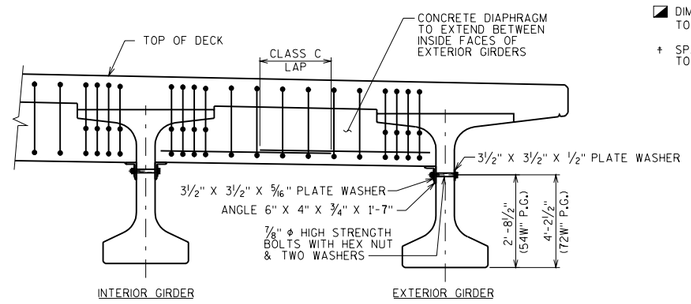

PART TRANSVERSE SECTION AT DIAPHRAGM EXPANSION END

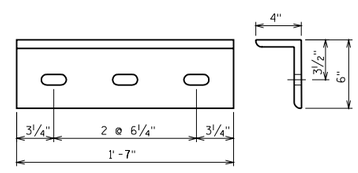

ANGLE

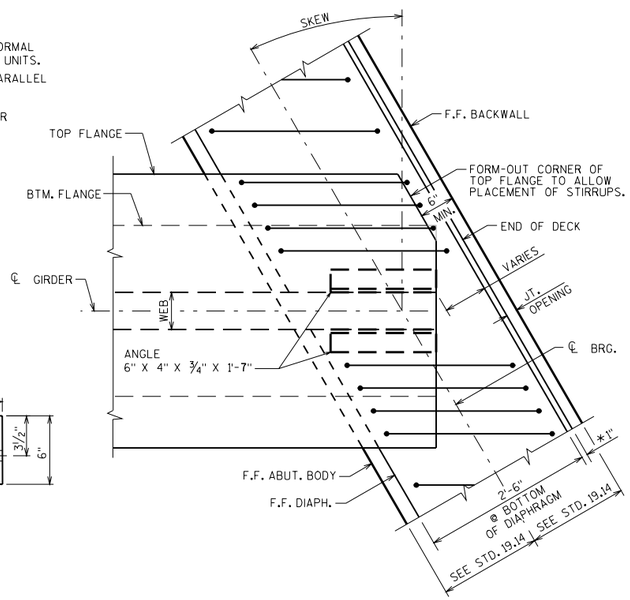

TOP VIEW OF DIAPHRAGM (EXPANSION END)

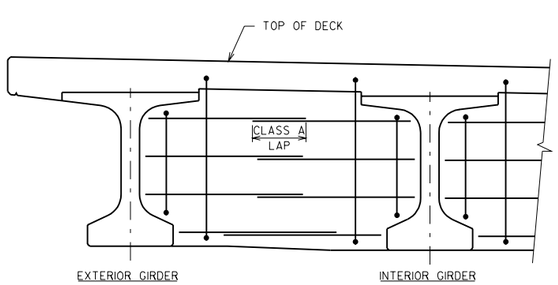

PART TRANSVERSE SECTION AT DIAPHRAGM PIER

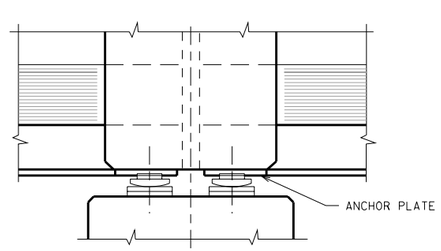

DIAPHRAGM AT STEEL OR ELASTOMERIC BEARINGS SECTION THRU HAUNCH AT PIER

NOTES

DIAPHRAGM SUPPORT ANGLES SHALL BE ASTM A709 GRADE 36. ALL BOLTS, NUTS AND WASHERS SHALL BE ASTM A325 TYPE 1.

ALL SUPPORT ANGLES SHALL BE HOT-DIPPED GALVANIZED. ALL BOLTS, NUTS AND WASHERS SHALL BE HOT-DIPPED GALVANIZED IN ACCORDANCE WITH ASTM A153 CLASS C. GALVANIZED NUTS SHALL BE TAPPED OVERSIZED IN ACCORDANCE WITH THE REQUIREMENTS OF ASTM A563 AND SHALL MEET THE REQUIREMENTS OF SUPPLEMENTARY REQUIREMENT S1 OF ASTM A563. LUBRICANT AND TEST FOR COATED NUTS.

LAP LENGTHS FOR DIAPHRAGM REINFORCEMENT SHALL BE BASED ON A CLASS "C" TENSION LAP SPLICE, UNLESS OTHERWISE NOTED.

ALL DIAPHRAGM SUPPORT HARDWARE SHALL BE INCIDENTAL TO CONCRETE MASONRY BRIDGES.

CONCRETE FOR ABUTMENT AND PIER DIAPHRAGMS SHALL BE PLACED WITH THE DECK CONCRETE. NO OPTIONAL CONSTRUCTION JOINT WILL BE ALLOWED.

PRETENSIONED 54W", 72W" & 82W" GIRDER SLAB & SUPERSTRUCTURE DETAILS

STATE OF WISCONSIN
DEPARTMENT OF TRANSPORTATION
STRUCTURES DEVELOPMENT SECTION

APPROVED: _____ DATE: 3-06

STANDARD 19.20