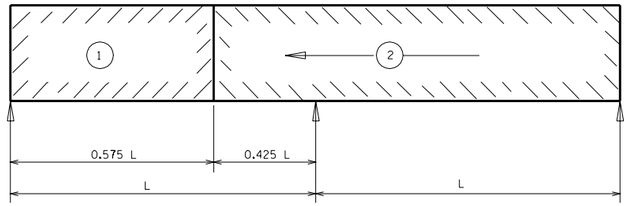

STEEL GIRDER IDEAL POURS - 2 SPANS

2 — INDICATES POUR NUMBER AND DIRECTION OF POUR

S = TOTAL NUMBER OF SPANS

P = TOTAL NUMBER OF SUPPORTS.

L = LENGTH OF EXTERIOR SPAN.

$n = \text{RATIO} = \dfrac{\text{INTERIOR SPAN}}{\text{EXTERIOR SPAN}}$

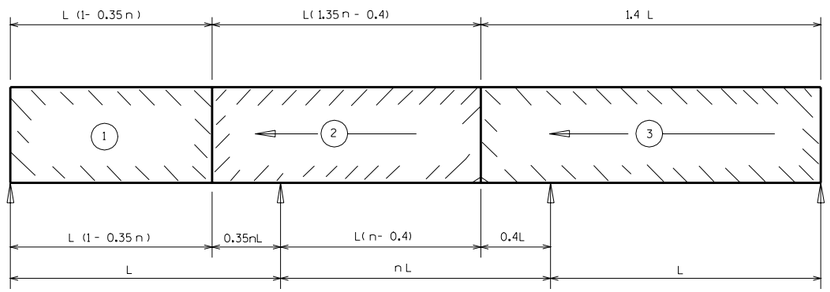

STEEL GIRDER IDEAL POURS - 3 SPANS

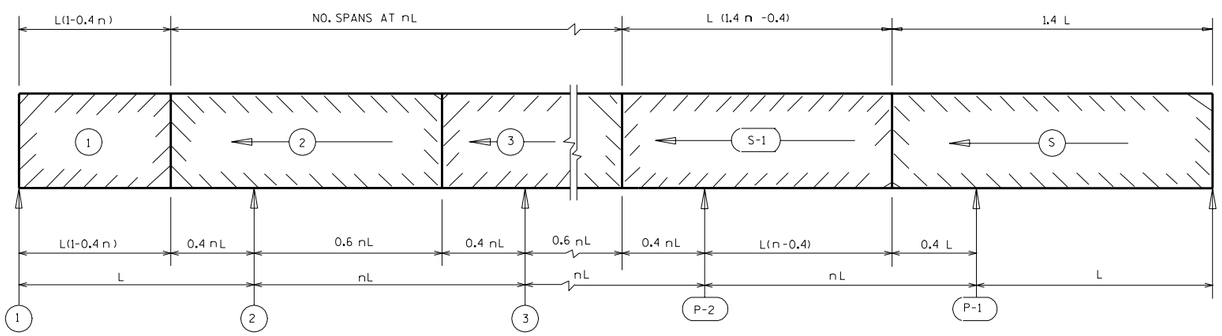

STEEL GIRDER IDEAL POURS - ANY NUMBER OF SPANS

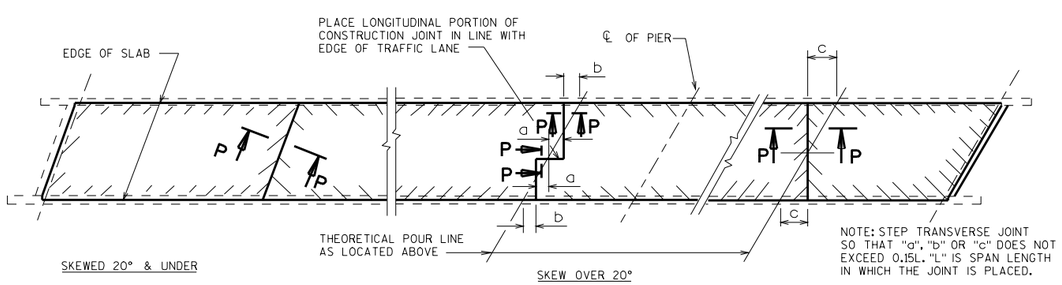

PLAN VIEW - SHOWING PLACEMENT OF TRANSVERSE CONSTRUCTION JOINTS

NOTES ON PLANS

THE RATE OF PLACING CONCRETE SHALL EQUAL OR EXCEED ½ SPAN LENGTH PER HOUR BUT NEED NOT EXCEED 100 CU. YDS. PER HOUR. (REQUIRED ONLY FOR CONTINUOUS STEEL GIRDERS.)

TRANSVERSE CONSTRUCTION JOINTS, EXCEPT THOSE ADJACENT TO IN SPAN HINGES, MAY BE OMITTED WITH THE APPROVAL OF THE STRUCTURES DESIGN SECTION.

TWO OR MORE ALTERNATE POURS MAY BE PLACED ON THE SAME DAY. (REQUIRED ONLY WHEN A POURING SEQUENCE IS SHOWN ON PLANS.)

THE CONTRACTOR MAY SUBMIT AN ALTERNATE POURING SEQUENCE SUBJECT TO THE APPROVAL OF THE STRUCTURES DESIGN SECTION. (REQUIRED ONLY WHEN A POURING SEQUENCE IS SHOWN ON THE PLANS.)

DESIGN NOTES

TRANSVERSE CONSTRUCTION JOINTS SHALL BE DETAILED ON PLANS TO LIMIT THE VOLUME OF POUR TO < 600 CU. YDS. IN URBAN AREAS AND < 300 CU. YDS. IN OTHER AREAS. GENERALLY FOR STEEL GIRDER SUPERSTRUCTURES LOCATE THE TRANSVERSE JOINTS AT THE 0.6 POINT (CONCRETE IN 60% OF SPAN) AND FOR PRESTRESS GIRDER SUPERSTRUCTURES LOCATE JOINTS NEAR THE 0.75 POINT. (CONCRETE IN 75% OF SPAN) CONSIDER CUT-OFF POINTS OF CONTINUITY REINFORCING STEEL WHEN LOCATING JOINTS FOR PRESTRESS GIRDER SUPERSTRUCTURES. LOCATION OF JOINTS IN STEEL GIRDER SUPERSTRUCTURES MAY VARY IF DEFLECTIONS ARE INFLUENCED BY IN SPAN HINGES OR UNUSUAL SPAN LENGTH RATIOS. CHECK WITH THE STRUCTURES DEVELOPMENT SECTION FOR ADDITIONAL INFORMATION.

DETAIL TRANSVERSE CONSTRUCTION JOINTS 5'-0" FROM ℄ OF IN SPAN HINGES, (ONE ON EACH SIDE OF HINGE) THE CONCRETE BETWEEN THESE JOINTS SHOULD BE THE LAST POUR PLACED.

WHEN THE WIDTH OF SLAB IS GREATER THAN 90 FEET, A LONGITUDINAL CONSTRUCTION JOINT SHALL BE DETAILED. LOCATE LONGITUDINAL CONSTRUCTION JOINT ALONG EDGE OF LANE LINE AND AT LEAST 6 INCHES FROM EDGE OF TOP FLANGE OF GIRDER.

FOR GRADES OVER 3% THE PREFERRED DIRECTION OF POUR IS UPHILL.

AN ALTERNATE POURING SEQUENCE IS TO POUR THE DL POSITIVE MOMENT AREAS AND THEN THE DL NEGATIVE MOMENT AREAS. THE SEQUENCE MAY BE STARTED ANYWHERE ON THE BRIDGE.

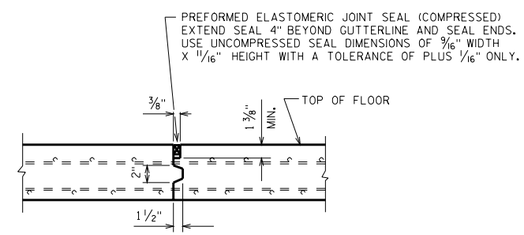

SECTION P

SLAB POURING SEQUENCE	
STATE OF WISCONSIN DEPARTMENT OF TRANSPORTATION STRUCTURES DEVELOPMENT SECTION	
APPROVED: _____	DATE: 2-05