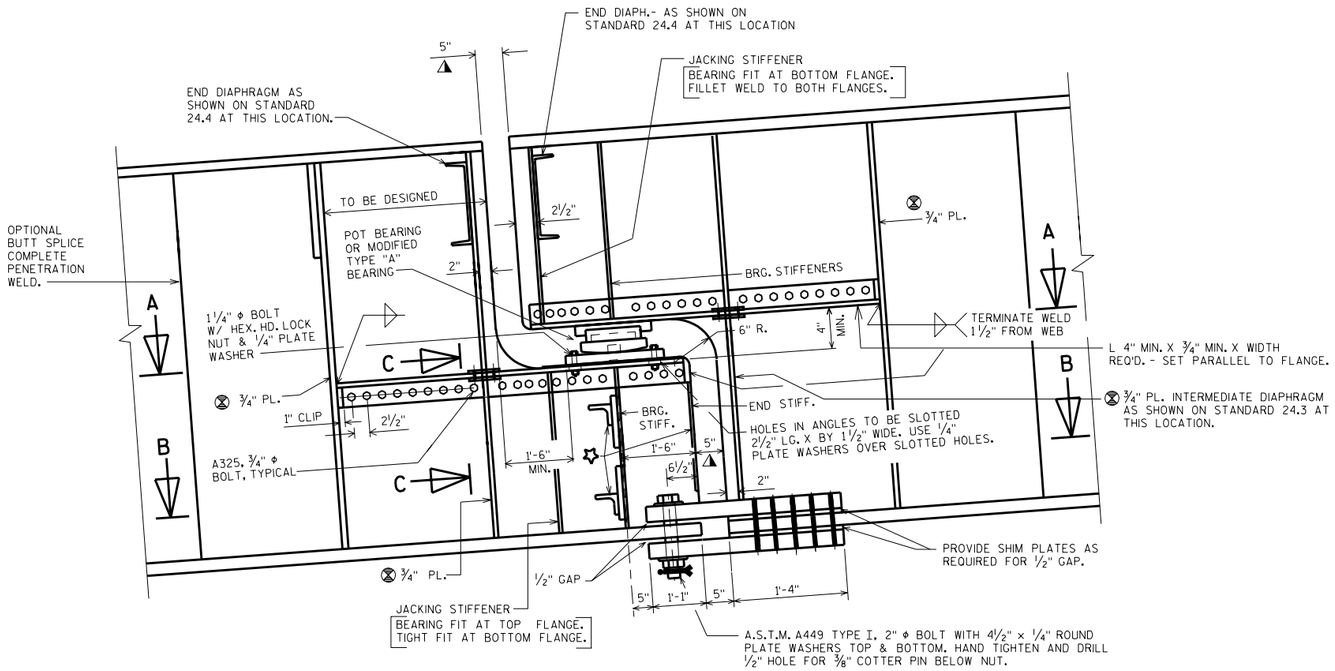

ELEVATION

NOTES

⊗ FOR WELDING DETAILS SEE "CONNECTION STIFFENER DETAILS" ON STANDARD 24.2 MINIMUM PLATE SIZE SHOWN. DESIGN ACTUAL SIZE REQUIRED.

STIFFENERS AND BEARING PLATES ARE ALL PERPENDICULAR TO FLANGES. ANGLES ARE PARALLEL TO FLANGES.

DESIGNER NOTES

SIZE AND LENGTH OF ANGLES, NUMBER OF BOLTS THRU ANGLES, THICKNESS OF WEB PLATE, AND SIZE OF BEARING STIFFENERS AND JACKING STIFFENERS SHALL BE DETERMINED FROM AN ANALYSIS USING THE VERTICAL AND HORIZONTAL FORCES ACTING AT THE HINGE.

▲ THE 5" OPENING BETWEEN GIRDER WEB AND FLANGE PLATES IS FOR FABRICATION ACTUAL OPENING IS BASED ON EXPANSION LENGTH AND TEMPERATURE.

SLOTTED HOLES OF 6" IN THE FLANGES AND CONNECTING BARS WILL ACCOMMODATE A TOTAL TEMPERATURE MOVEMENT OF 8" (± 4" FROM 45° F). THE DESIGNER MAY NEED TO INCREASE OR DECREASE THE LENGTH OF THE SLOT TO MEET SPECIFIC JOB REQUIREMENTS.

✡ CROSS FRAME UNDER BRG. AND END STIFFENER IS ONLY REQ'D. IF TOTAL WEB HEIGHT EXCEEDS 8'-0".

SEE BRIDGE MANUAL, SECTION 24.1 FOR CRITERIA FOR LOCATING HINGE JOINTS.

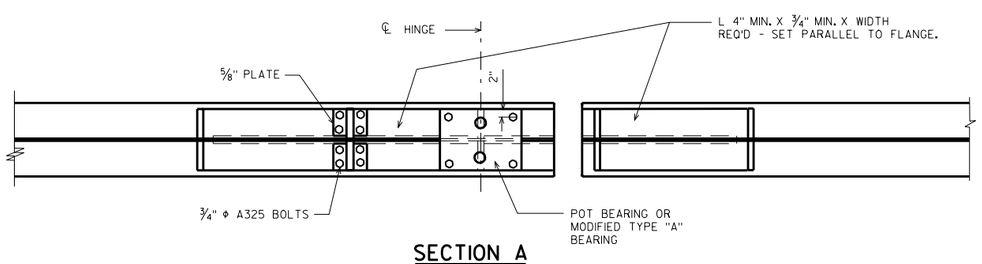

SECTION A

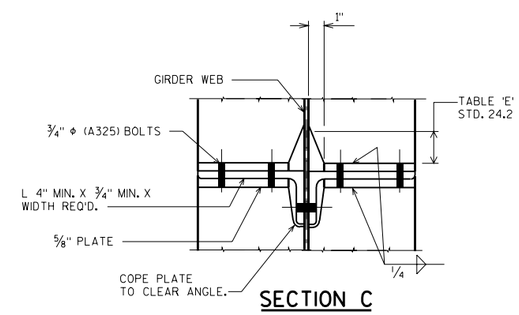

SECTION C

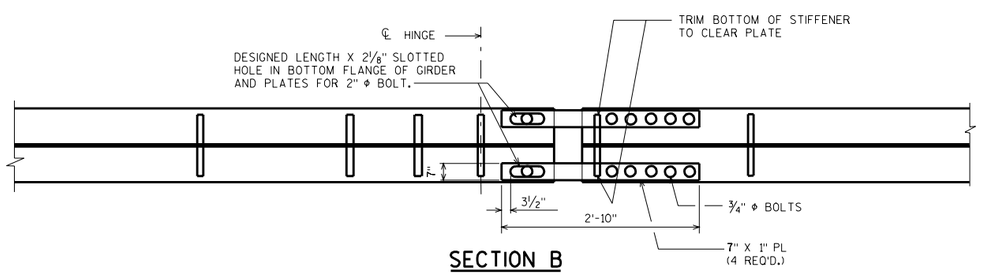

SECTION B

EXPANSION HINGE JOINT DETAILS	
STATE OF WISCONSIN DEPARTMENT OF TRANSPORTATION STRUCTURES DEVELOPMENT SECTION	
APPROVED: Stanley W. Woods	DATE: 1/99

STANDARD 24.8