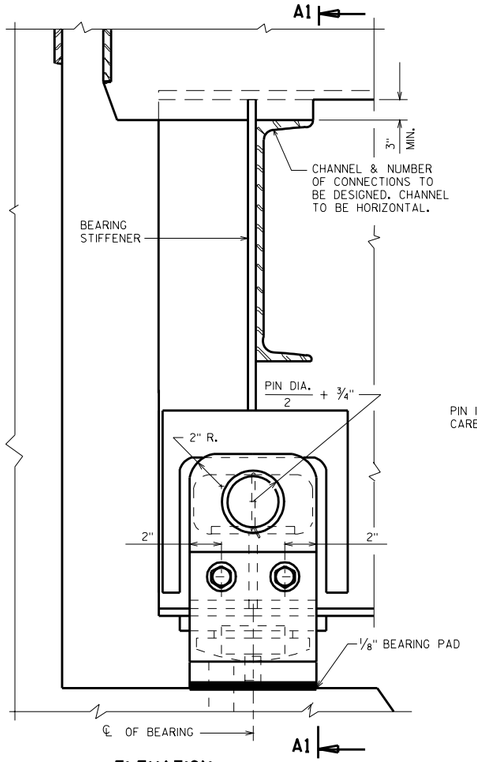

ELEVATION

PERMANENT HOLD DOWN DEVICE

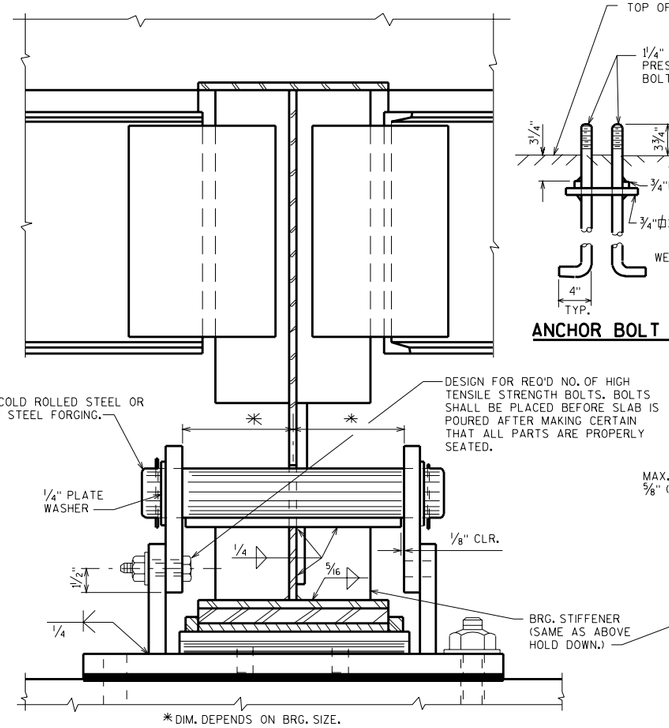

SECTION A1

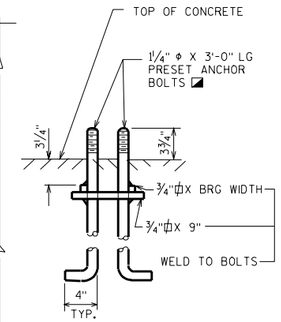

ANCHOR BOLT DETAIL

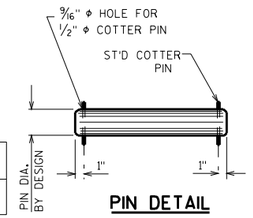

PIN DETAIL

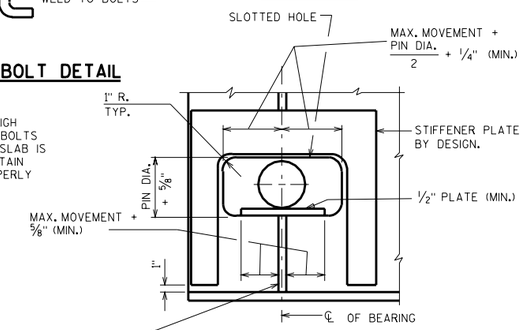

GIRDER DETAIL

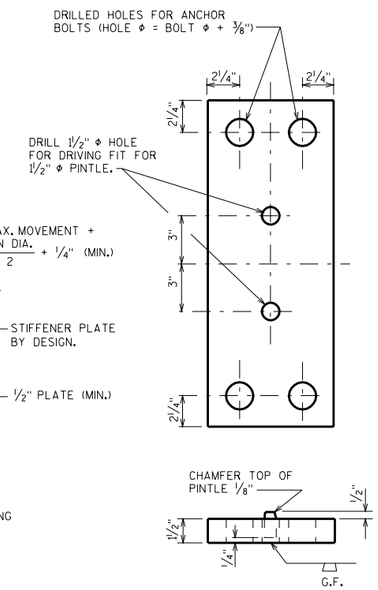

MASONRY PLATE

NOTES (PERMANENT HOLD DOWN DEVICE)

ALL STRUCTURAL STEEL PLATES SHALL BE FLAT ROLLED STEEL PLATES WITH ALL SURFACES SMOOTH AND FREE FROM WARP AND ALL EDGES SMOOTH, STRAIGHT AND VERTICAL.

ALL PLATE CUTS SHALL BE MACHINE OR MACHINE FLAME CUTS

ANCHOR BOLTS SHALL BE THREADED 3". PROVIDE ONE STANDARD WROUGHT WASHER AND ONE HEX. NUT PER BOLT. CHAMFER TOP OF ANCHOR BOLTS PRIOR TO THREADING.

ALL MATERIAL FOR BEARINGS INCLUDING SHIMS BUT EXCLUDING PINTLES, ANCHOR BOLTS, NUTS, WASHERS AND PINS SHALL CONFORM TO A.S.T.M. A709 GRADE 50W.

ALL ANCHOR BOLTS, NUTS AND WASHERS SHALL CONFORM TO A.S.T.M. A709 GRADE 36 OR MATERIAL OF EQUIVALENT YIELD STRENGTH AND ELONGATION.

STEEL PINTLES SHALL CONFORM TO ASTM A449 OR MATERIAL OF EQUIVALENT YIELD STRENGTH AND ELONGATION.

ALL MATERIALS IN BEARINGS INCLUDING HOLD DOWN SHALL BE PAID FOR AT THE UNIT PRICE BID FOR "BEARING ASSEMBLIES EXPANSION".

ALL MATERIAL WELDED TO THE GIRDERS SHALL BE PAID FOR UNDER THE BID ITEM "STRUCTURAL STEEL CARBON".

WHEN REQUIRED, HOLD DOWN DEVICES SHALL BE PLACED SYMMETRICALLY ABOUT LONGIT. ℄ OF FRAMING PLAN. MAXIMUM SPACING OF HOLD DOWNS SHALL BE AT ALTERNATE GIRDERS. HOLD DOWN DEVICE TO BE DESIGNED FOR MIN. UPLIFT CAPACITY OF 20 KIPS.

◪ FOR REPLACEMENT BEARINGS, ANCHOR BOLTS SHALL BE 1 1/2" DIAMETER X 3'-0" LONG AND FULLY THREADED. THESE ANCHOR BOLTS SHALL BE PAID FOR AS "MASONRY ANCHORS TYPE S 11/2-INCH" AND BE EPOXY ANCHORED. SEE SPECIAL PROVISION.

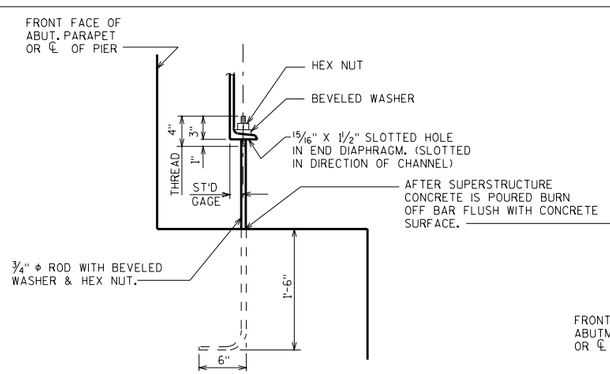

ELEVATION

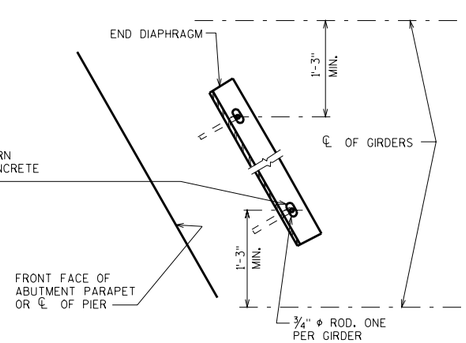

SECTION

TEMPORARY HOLD DOWN DEVICES SHALL BE PLACED AT THAT END OF ALL CONTINUOUS STEEL GIRDER UNITS WHERE THE SLAB POUR TERMINATES, EXCEPT WHERE PERMANENT HOLD DOWN DEVICES ARE PLACED AT THIS LOCATION.

TEMPORARY HOLD DOWN DEVICE

HOLD DOWN DEVICES	
STATE OF WISCONSIN DEPARTMENT OF TRANSPORTATION STRUCTURES DEVELOPMENT SECTION	
APPROVED: _____	DATE: 1-05