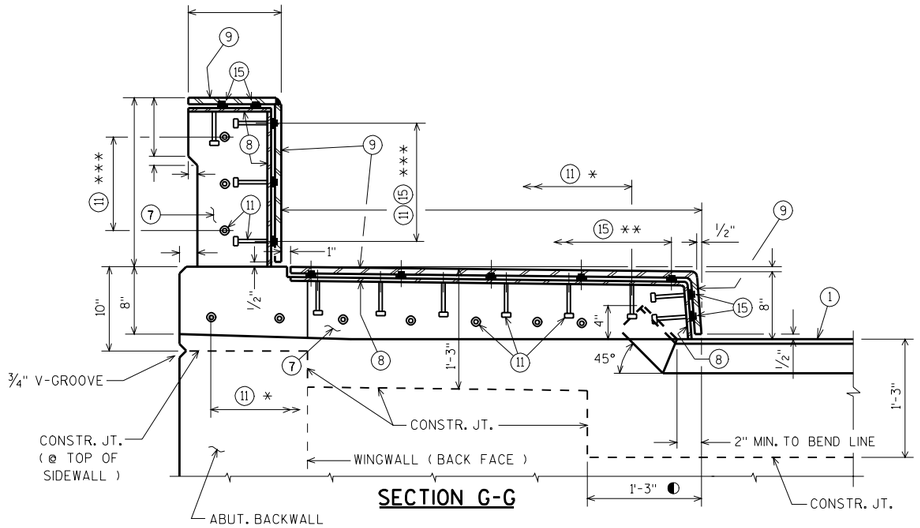

SECTION G-G

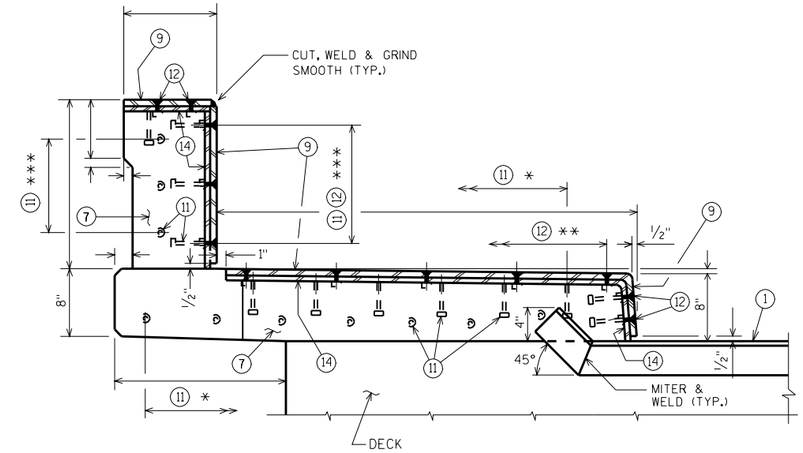

SECTION K-K

* 6" MAX. SPA.

** 1'-0" MAX. SPA.

*** 2 SPA. (1'-8" PARA. HEIGHT)
4 SPA. (2'-8" PARA. HEIGHT)

◐ PERPENDICULAR TO FACE OF CURB

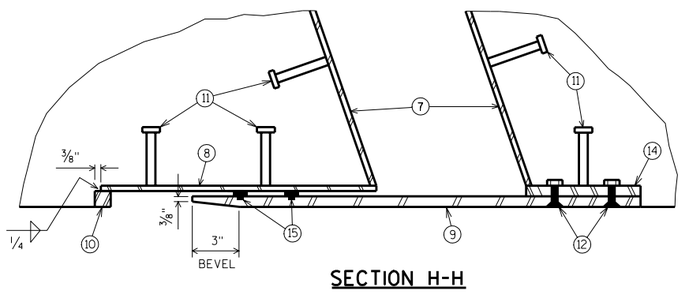

SECTION H-H

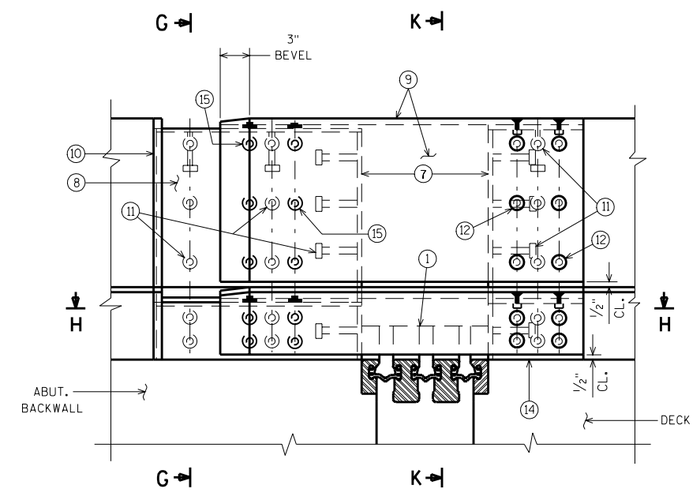

ELEVATION OF SIDEWALK W/ PARAPET

DIRECTION OF TRAFFIC
DETERMINES THE ORIENTATION
OF PLATES (9) & (10)

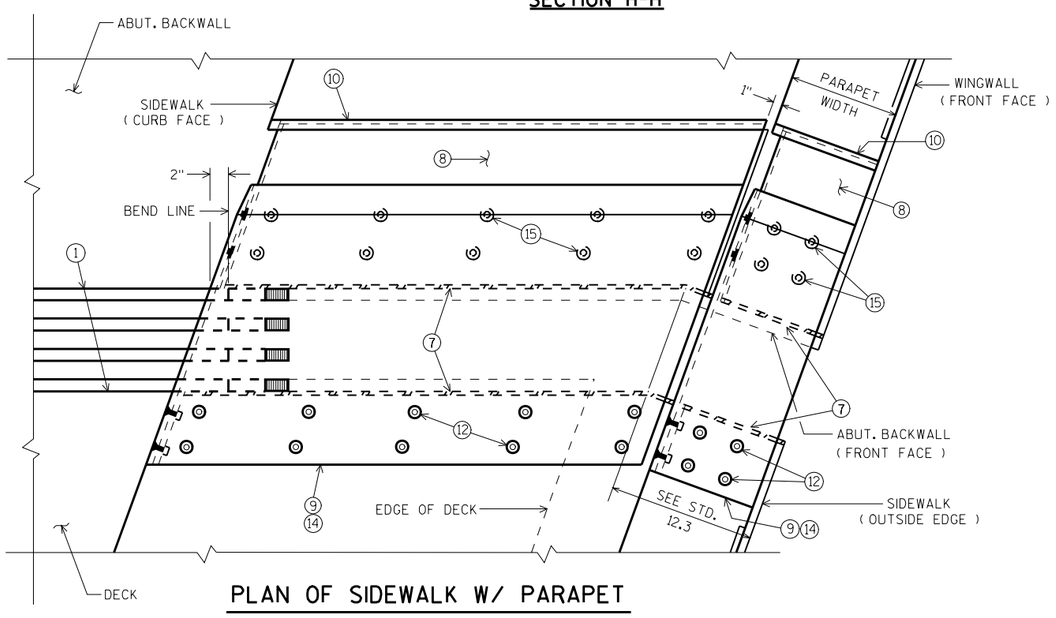

PLAN OF SIDEWALK W/ PARAPET

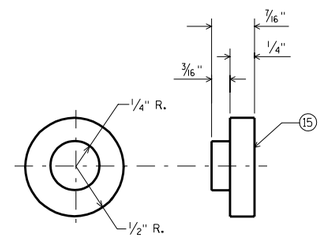

ADIPRENE BUTTON DETAIL

COVER PLATES FOR SIDEWALK W/ CONC. PARA.	
STATE OF WISCONSIN DEPARTMENT OF TRANSPORTATION STRUCTURES DEVELOPMENT SECTION	
APPROVED: Stanley M. Woods	DATE: 1-02

STANDARD 28.4