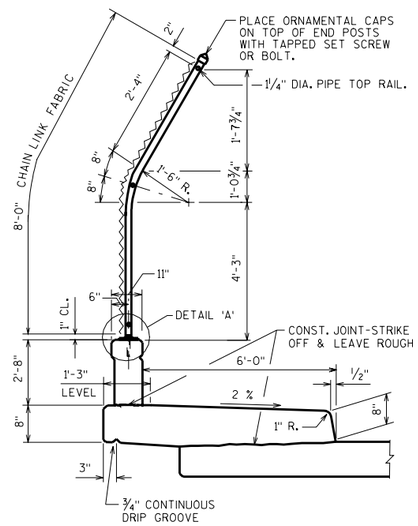

SECTION THRU FENCE ON 'A' PARAPET

NOTE: FOR NON-SIDEWALK APPLICATIONS USE VERTICAL POSTS. (NO BEND)

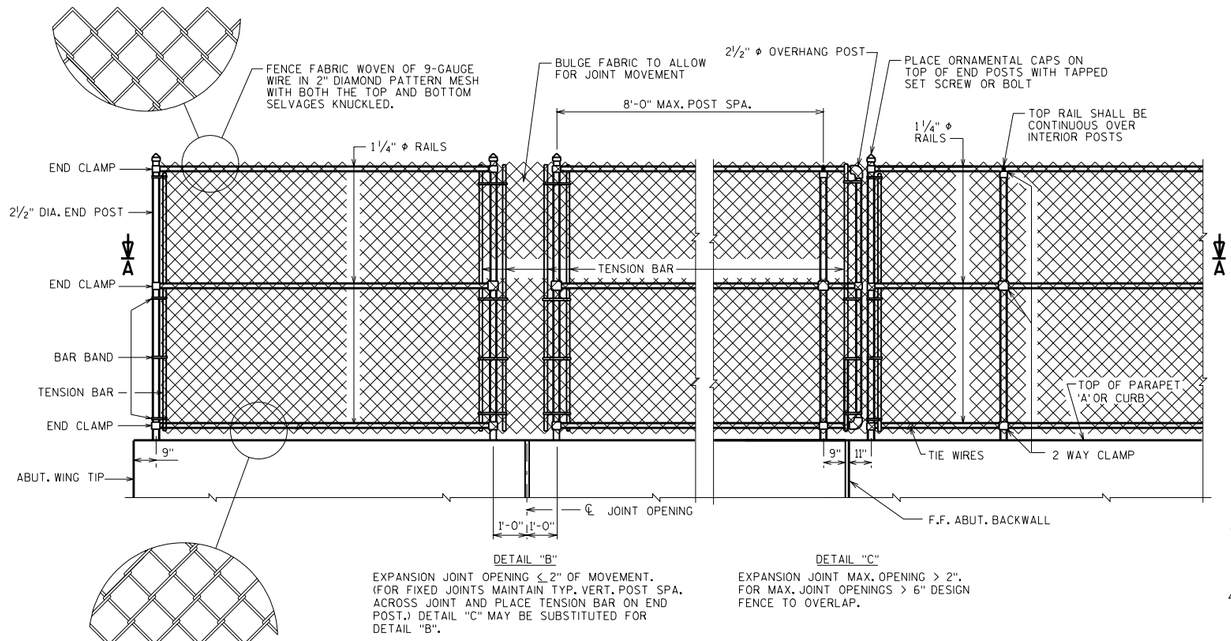

FENCE PART ELEVATION

(OUTSIDE)

GENERAL NOTES

BID ITEM SHALL BE "FENCE CHAIN LINK _-FT" WHICH INCLUDES ALL ITEMS SHOWN.

POSTS ARE TO BE SET VERTICAL.

ALL FENCING COMPONENTS SHALL BE GALVANIZED STEEL OR APPROVED ALTERNATE LISTED BELOW.

ALL RAILS, POSTS AND SLEEVES ARE STANDARD WEIGHT PIPE, SCHEDULE 40.

PLACE ALL NUTS ON OUTSIDE OF FENCE.

TOP RAIL SHALL BE CONTINUOUS OVER INTERIOR POSTS. MINIMUM LENGTH OF TOP RAIL BETWEEN SPLICES SHALL BE 20'-0". PLACE TOP RAIL SPLICES NEAR ¼ POINTS OF POST SPACING. NO 9 GAGE TIES AT 9" SPACING REQ'D. ON RAILS & POSTS WITHOUT TENSION BARS.

ALTERNATE FENCING MATERIALS ARE ALUMINUM, ALUMINUM COATED STEEL, AND APPROVED COLOR COATING SYSTEMS. IF ALTERNATE MATERIALS ARE USED FOR POSTS & RAILS, THESE ELEMENTS SHOULD BE DESIGNED.

PEDESTRIAN RAILING MAY BE USED ON WINGWALL PARAPETS IF CHAIN LINK FENCE DOES NOT CONTINUE BEYOND BRIDGE.

HANDRAILS SHALL BE USED ALONG BRIDGE SIDEWALKS WHERE THE SLOPE OF THE SIDEWALK IS GREATER THAN 5%. TOP OF HANDRAIL GRIPPING SURFACES SHALL BE MOUNTED BETWEEN 30" & 34" ABOVE SIDEWALK SURFACE. USE 30" NEAR SCHOOL ZONES. IF FEASIBLE, HANDRAILS SHALL BE PROVIDED ALONG BOTH SIDES OF SIDEWALK. FOR HANDRAIL DETAILS SEE STANDARD 37.2.

* ALTERNATE BOULEVARD 2-WAY CLAMP MAY BE USED WHEN THE POST IS EITHER BOLTED TO THE 3½"Φ SLEEVE OR DIRECTLY WELDED TO THE BASE PLATE.

⚠ ½" DIA. X 6⅞" LONG GALVANIZED HEX BOLT WITH NUT & WASHER. TYPE S. ½" Φ CONCRETE MASONRY ANCHORS MAY BE SUBSTITUTED FOR ½" Φ BOLTS. ANCHOR PLATE NOT REQUIRED WHEN TYPE S ANCHORS ARE USED. SEE ✿

✿ ½" Φ CONCRETE MASONRY ANCHOR, TYPE "S". 6" EMBEDMENT (EPOXY ANCHORED) MIN. PULLOUT OF 10 KIPS. THREADED LENGTH OF ANCHOR, WASHER, AND NUT SHALL BE GALVANIZED.

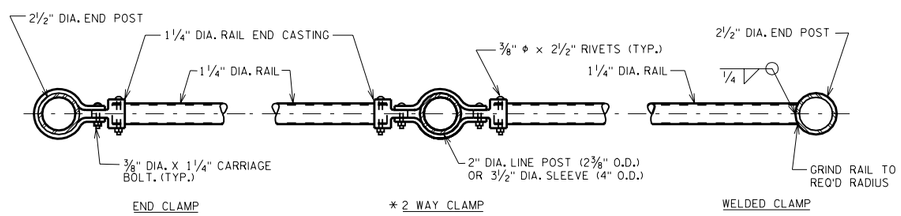

SECTION A-A

NOTE: PLACE ALL NUTS ON OUTSIDE OF FENCE

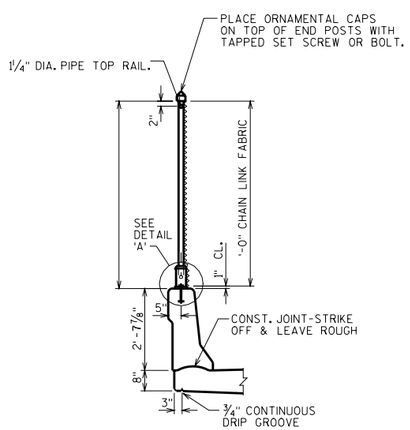

SECTION THRU FENCE ON 'LF' PARAPET

FOR NON-SIDEWALK APPLICATIONS

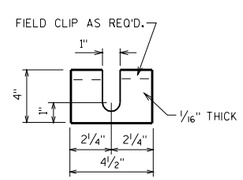

POST SHIM DETAILS

SHIMS REQUIRED ONLY WHEN POSTS ARE WELDED TO BASE PLATES. PROVIDE 4 SHIMS PER POST.

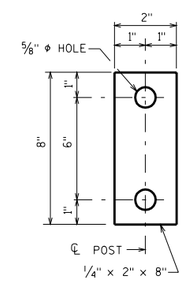

ANCHOR PLATE

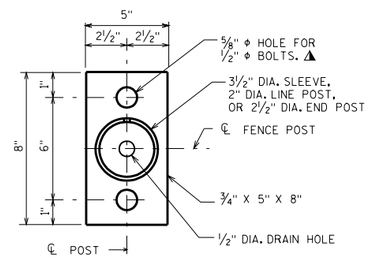

BASE PLATE

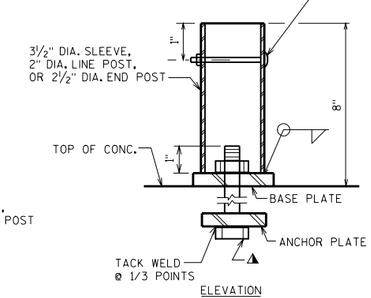

POST ATTACHMENT

UNIT SHALL BE GALV. AFTER FABRICATION

NOTE: IN LIEU OF USING THE 3½" Φ SLEEVE, THE 2" Φ FENCE POST MAY BE WELDED TO THE BASE PLATE.

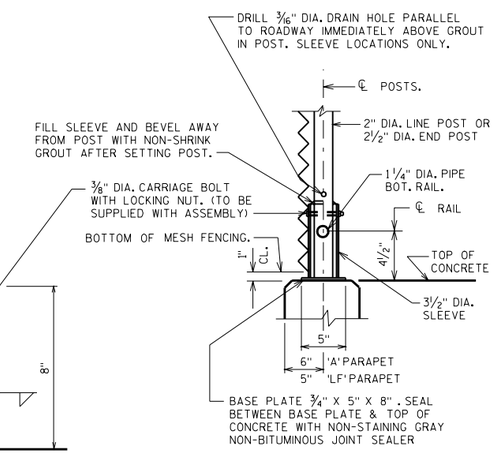

DETAIL A

CHAIN LINK FENCE DETAILS	
STATE OF WISCONSIN DEPARTMENT OF TRANSPORTATION STRUCTURES DEVELOPMENT SECTION	
APPROVED: _____	DATE: 3-06