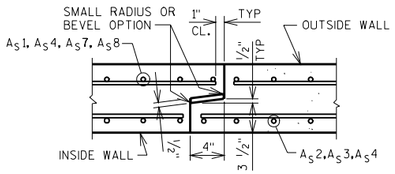

TONGUE AND GROOVE JOINT DETAIL

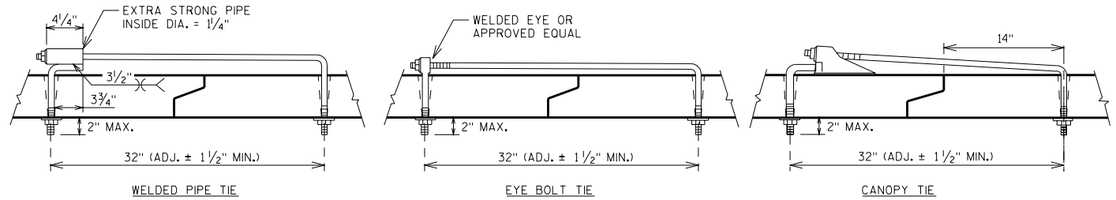

JOINT TIES

NOTES:
EITHER EYE BOLT TIES, WELDED PIPE TIES, OR CANOPY TIES MAY BE USED. THREADS MAY BE CUT OR ROLLED. TIE NUTS SHALL BE TIGHTENED AS DIRECTED BY THE ENGINEER. (2 TIES REQ'D. PER JOINT.) (TIES TO BE GALVANIZED.)

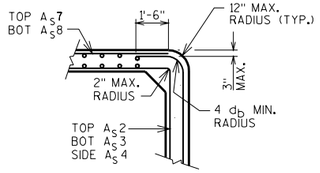

ALTERNATE DETAIL OPTION

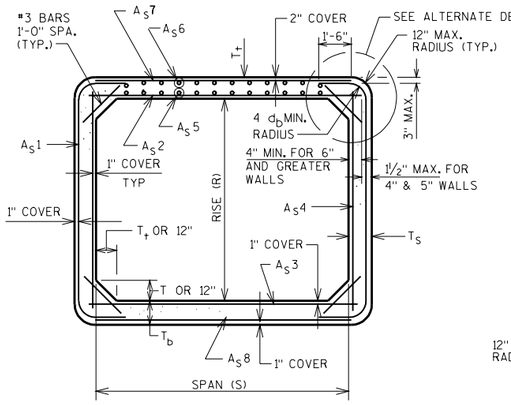

SECTION THRU BARREL

FOR LESS THAN 2 FEET OF COVER

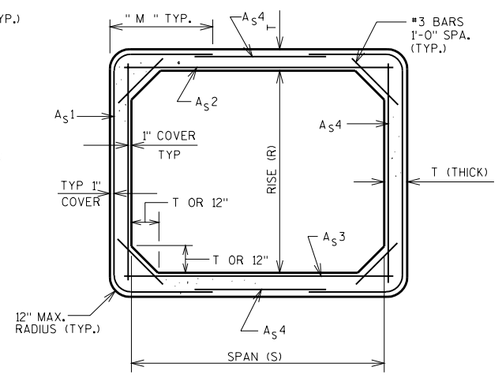

SECTION THRU BARREL

FOR 2'-0" OR MORE OF COVER

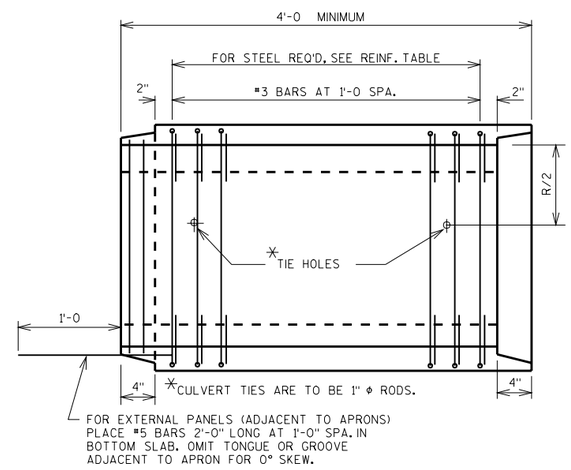

LONGITUDINAL SECTION

NOTES

DETAILS FOR MATERIALS, FABRICATION, CONSTRUCTION AND DESIGN OF PRECAST BOX CULVERTS NOT SHOWN OR STATED ON THIS DRAWING SHALL BE IN ACCORDANCE WITH THE CURRENT AASHTO STANDARD SPECIFICATIONS FOR TRANSPORTATION MATERIALS, M259 OR M273; AASHTO STANDARD SPECIFICATIONS FOR HIGHWAY BRIDGES, DIVISION 2, SECTION 27; WISCONSIN DOT STANDARD SPECIFICATIONS & APPLICABLE SPECIAL PROVISIONS, EXCEPT THAT THE CONCRETE MIXTURE SHALL CONTAIN NOT LESS THAN 565 LBS. OF CEMENTITIOUS MATERIALS PER CUBIC YARD.

THE DESIGN OF PRECAST BOX CULVERTS WITH 2'-0" OR MORE OF COVER SHALL BE AS STATED IN THE AASHTO MATERIAL SPECIFICATIONS M259, TABLE 1, 2, OR 3 EXCEPT THAT THE DESIGN SHALL BE BASED ON AN ADJUSTED "EARTH COVER" EQUAL TO THE ACTUAL "EARTH COVER" MULTIPLIED BY 1.3 AND ROUNDED UP OR DOWN TO THE NEAREST ROW IN THE TABLE.

THE DESIGN OF PRECAST BOX CULVERTS WITH LESS THAN 2 FEET OF FILL SHALL BE AS STATED IN ASTM C1433.

ALL PRECAST BOX SECTIONS SHALL BE PLACED ON A BEDDING OF "STRUCTURE BACKFILL" OF 6" MINIMUM DEPTH.

THE COVER OF CONCRETE OVER THE REINFORCEMENT SHALL BE 1 INCH OR 2 INCHES IF SHOWN WITH AN ALLOWABLE VARIATION OF -3/8" TO +1/2 INCH.

THE SPACING CTR. TO CTR. OF THE CIRCUMFERENTIAL WIRES SHALL NOT BE LESS THAN 2 INCHES NOR MORE THAN 4 INCHES. THE SPACING CTR. TO CTR. OF THE LONGIT. WIRES SHALL NOT BE MORE THAN 8 INCHES.

NOT MORE THAN FOUR (4) HOLES MAY BE CAST, DRILLED OR OTHERWISE NEATLY MADE IN THE SHELL OF EACH PIECE OF BOX SECTION FOR HANDLING. THE HOLES SHALL BE TAPERED UNLESS DRILLED. HOLES SHALL BE FILLED WITH PORTLAND CEMENT MORTAR EXCEPT TAPERED HOLES MAY BE FILLED WITH CONCRETE PLUGS SECURED WITH PORTLAND CEMENT MORTAR OR OTHER APPROVED ADHESIVE.

THE JOINT ON THE BOTTOM OF THE CULVERT & THE SIDES OF THE CULVERT FROM THE BOTTOM TO A POINT 1'-0" FROM THE CEILING SHALL BE SEALED WITH A PREFORMED MASTIC. PREFORMED MASTIC MUST CONFORM TO AASHTO MATERIALS SPEC. M198, TYPE B. A 2'-0" STRIP OF GEOTEXTILE FABRIC SHALL BE PLACED OVER THE JOINTS ON THE TOP AND ON THE SIDES OF THE CULVERT. THE GEOTEXTILE FABRIC SHALL COMPLY WITH REQUIREMENTS OF STANDARD SPECIFICATION 645.2.4, SCHEDULE A. (FABRIC NOT REQUIRED OVER INSIDE WALL JOINTS OF MULTICELL INSTALLATION.)

WHEN TWO OR MORE BARRELS ARE UTILIZED IN PARALLEL FOR MULTICELL INSTALLATIONS THE CLEAR SPACING BETWEEN BARRELS SHALL BE 6 INCHES AND THE SPACE BETWEEN ADJACENT BARRELS FROM TOP OF BEDDING TO TOP OF TOP SLAB SHALL BE FILLED WITH GRADE "B" CONCRETE.

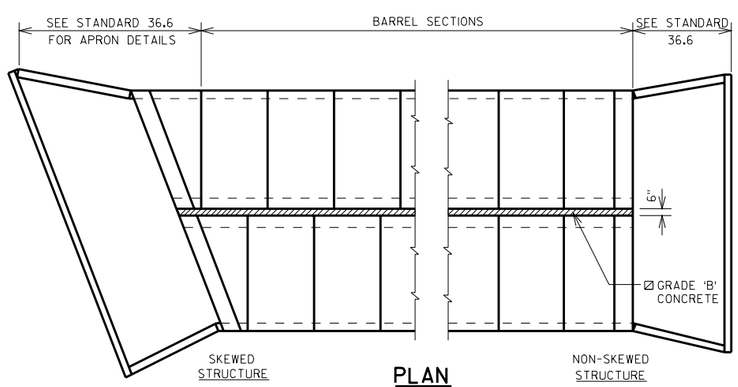

PLAN

MULTICELL INSTALLATION

BOX CULVERT DATA

DIMENSIONS			EARTH COVER (FT.)								
S (FT.)	R(FT.)	T OR T_s, T_b, T_t (IN.)									
REINFORCEMENT			AREA/FT.	LENGTH	M	AREA/FT.	LENGTH	M	AREA/FT.	LENGTH	M
A_s 1											
A_s 2											
A_s 3											
A_s 4											
A_s 5											
A_s 6											
A_s 7											
A_s 8											
TOTAL BARREL OR PANEL LENGTH											

PRECAST CONCRETE BOX CULVERT BARREL DETAILS

STATE OF WISCONSIN
DEPARTMENT OF TRANSPORTATION
STRUCTURES DEVELOPMENT SECTION

APPROVED: Stanley M. Woods

DATE: 6/02