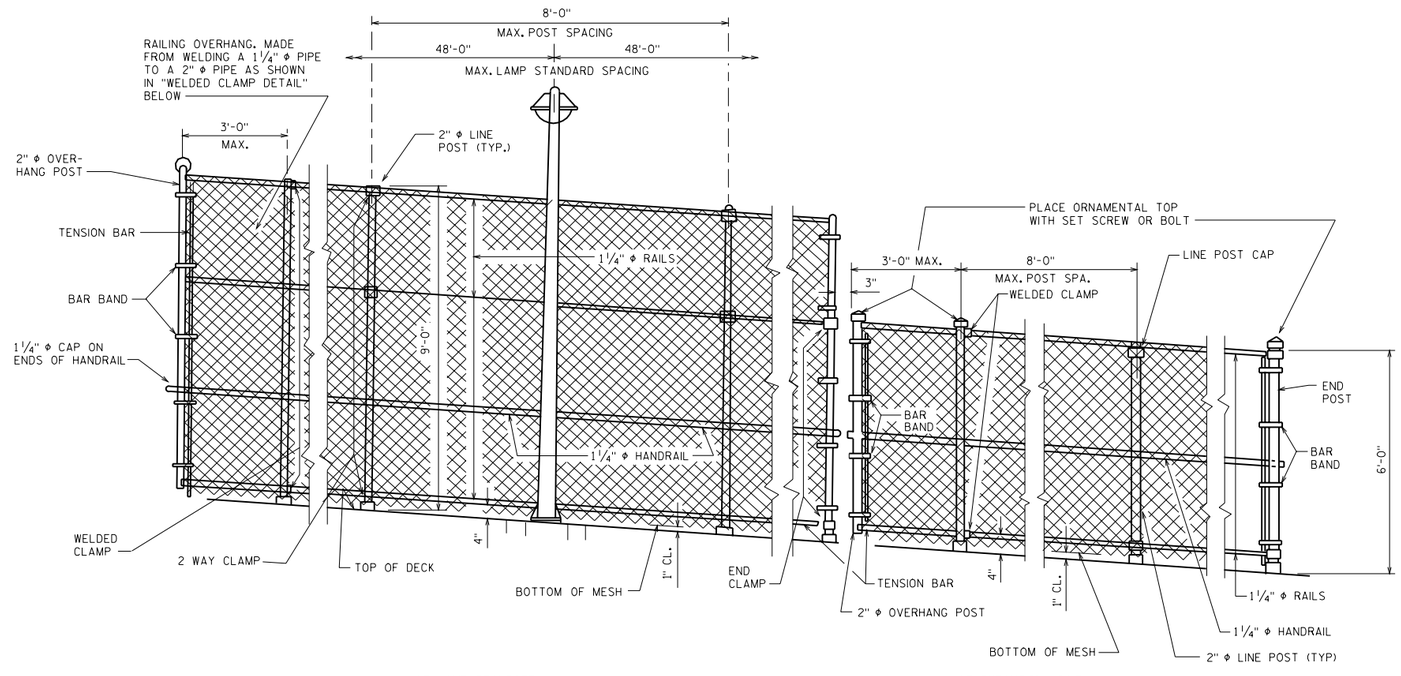

AT LAMP STANDARD

AT EXPANSION JOINT

ELEVATION OF FENCE

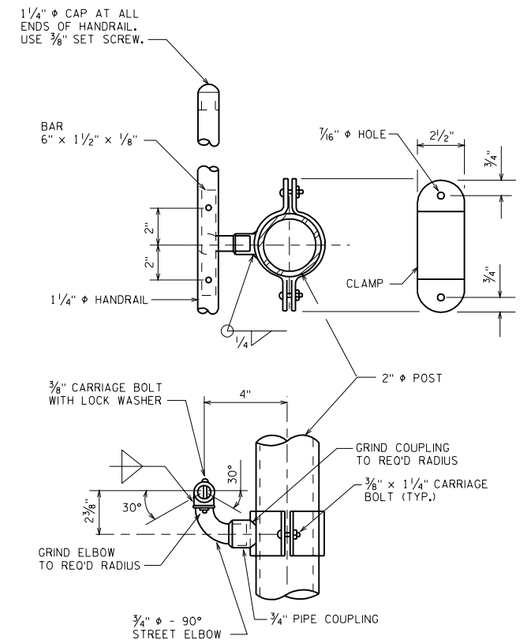

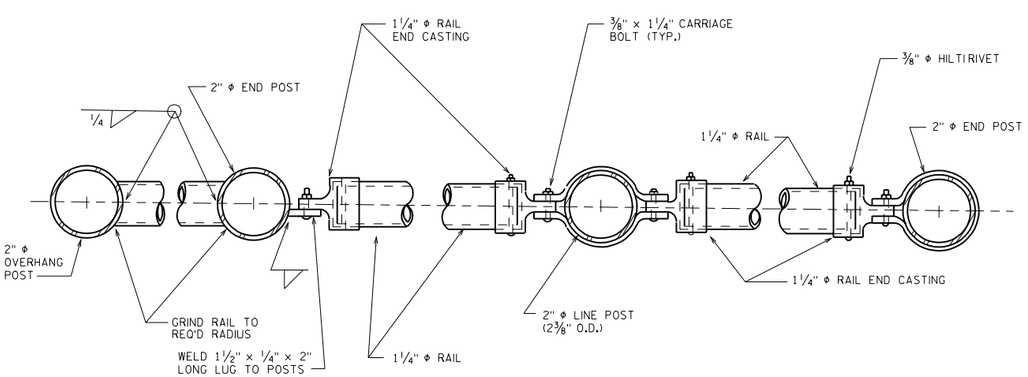

WELDED CLAMP

* 2 WAY CLAMP

(EXCEPT FOR TOP RAIL OF 6'-0" HIGH FENCE.)

END CLAMP

PLAN OF RAILING

NOTE: PLACE ALL NUTS ON OUTSIDE OF FENCE.

* ALTERNATE BOULEVARD 2-WAY CLAMP MAY BE USED WHEN THE POST IS EITHER BOLTED TO THE 3½"Φ PIPE SLEEVE OR DIRECTLY WELDED TO THE BASE PLATE.

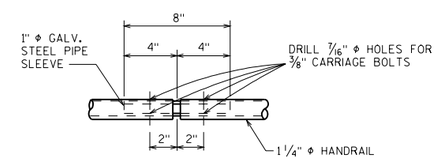

SPLICE DETAIL

HANDRAIL DETAILS

NOTES

SEE STD. 30.11 FOR FENCE FABRIC DETAILS.

PEDESTRIAN OVERPASS DETAILS	
STATE OF WISCONSIN DEPARTMENT OF TRANSPORTATION STRUCTURES DEVELOPMENT SECTION	
APPROVED: _____	DATE: 6/05