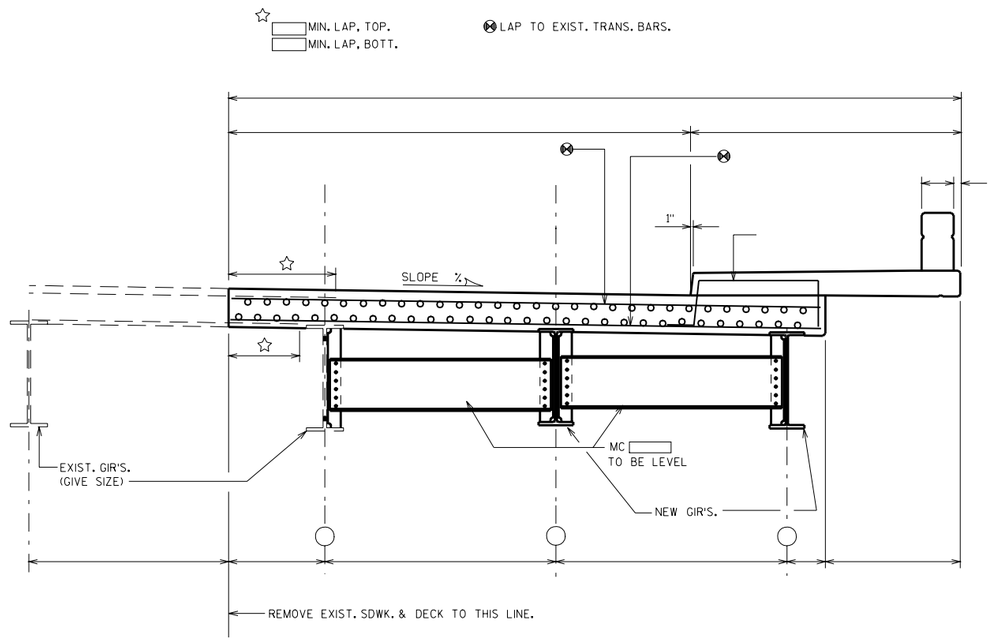

CROSS SECT. THRU RDWY.

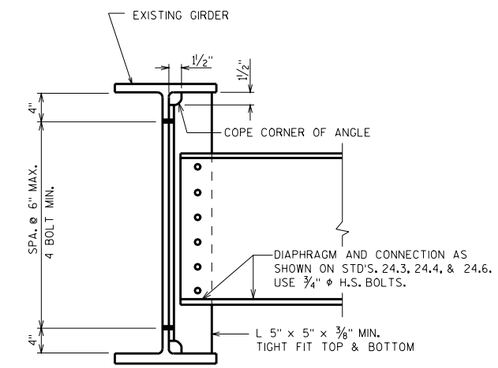

DIAPHRAGM CONNECTION TO
EXISTING STEEL GIRDER

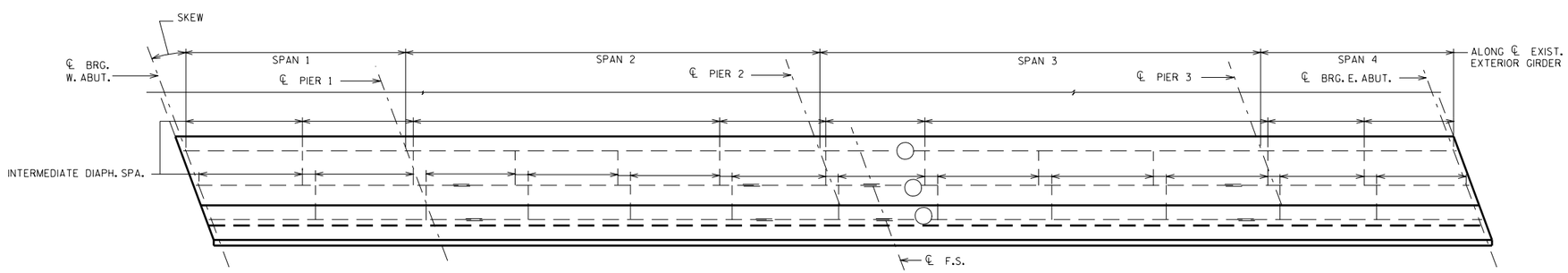

PLAN

SLAB WIDENING	
STATE OF WISCONSIN DEPARTMENT OF TRANSPORTATION STRUCTURES DEVELOPMENT SECTION	
APPROVED:	DATE: 8/99

STANDARD 40.7

Stanley M. Underwood