STATE PROJECT NUMBER	FEDERAL PROJECT NUMBER	SHEET NO.
	- -	

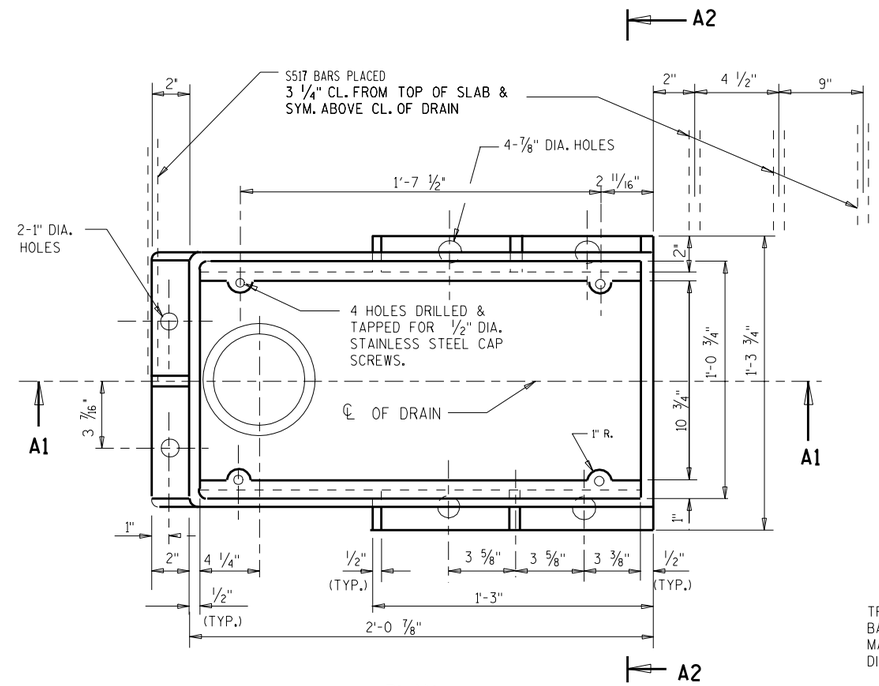

PLAN

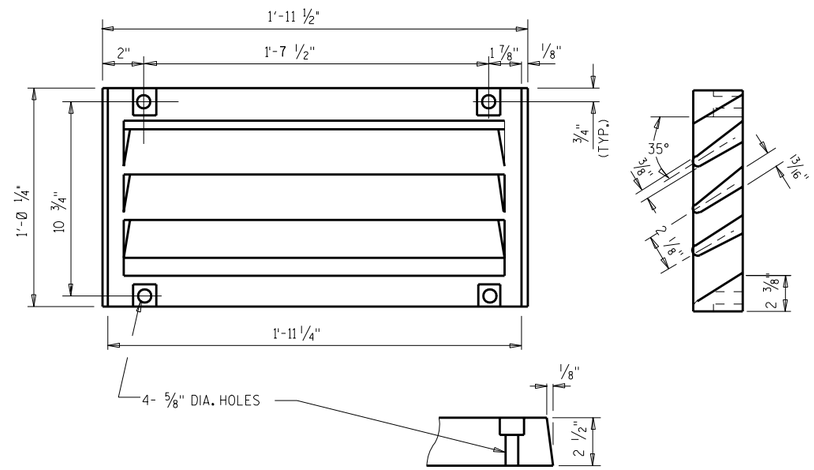

GRATE CASTING DETAIL

ATTACH GRATE TO
FRAME FOR SHIPMENT

TRANS. AND LONGIT. SLAB
BAR REINF. TO BE CUT A
MAX. 1" CL. FROM DRAIN
DISPLACE BARS WHERE POSSIBLE

GENERAL NOTES

ALL MATERIAL FOR TYPE 'GC' CASTING, EXCLUDING GRATE HOLD DOWN SCREWS, SHALL BE GRAY IRON CONFORMING TO A.S.T.M. A48, CLASS 30. (APPROX. WEIGHT = 225#)

MATERIAL FOR BRACKETS SHALL CONFORM TO A.S.T.M. A36.

THE CONTRACTOR MAY PROPOSE AN ALTERNATE TYPE OF BRACKET. THE PROPOSED ALTERNATE DETAILS SHALL BE SUBMITTED AND SUBJECT TO THE APPROVAL OF THE ENGINEER.

FLANGED 6" DIA. DOWNSPOUTS SHALL BE EITHER CAST MATERIAL OR FIBERGLASS CONFORMING TO A.S.T.M. D2996, GRADE I, CLASS A.

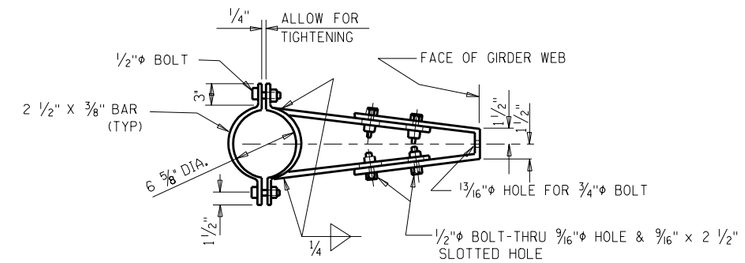

BRACKET DETAIL

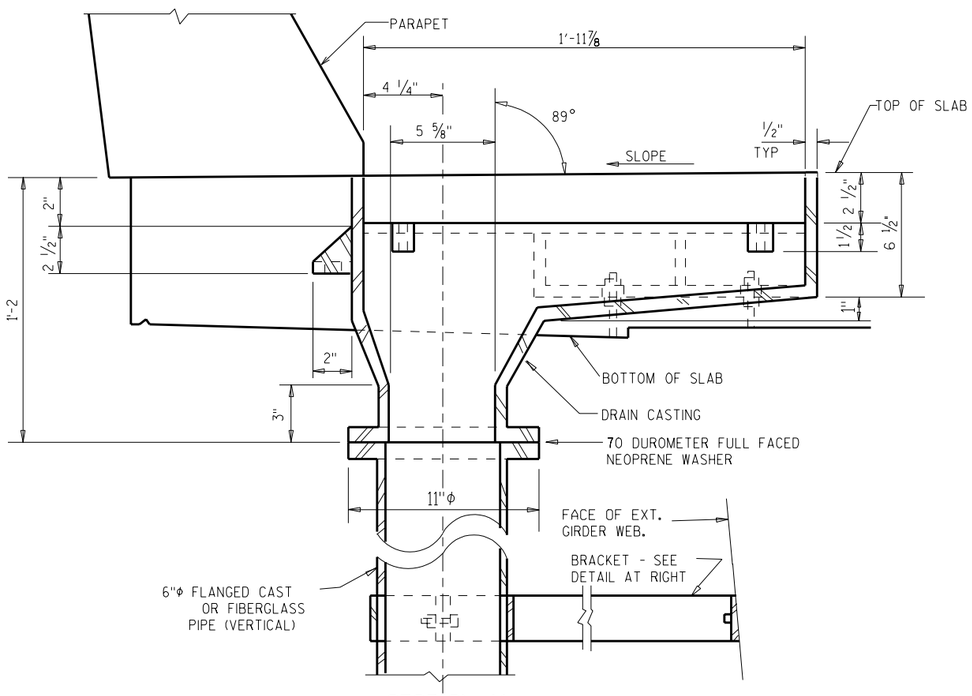

SECTION A1

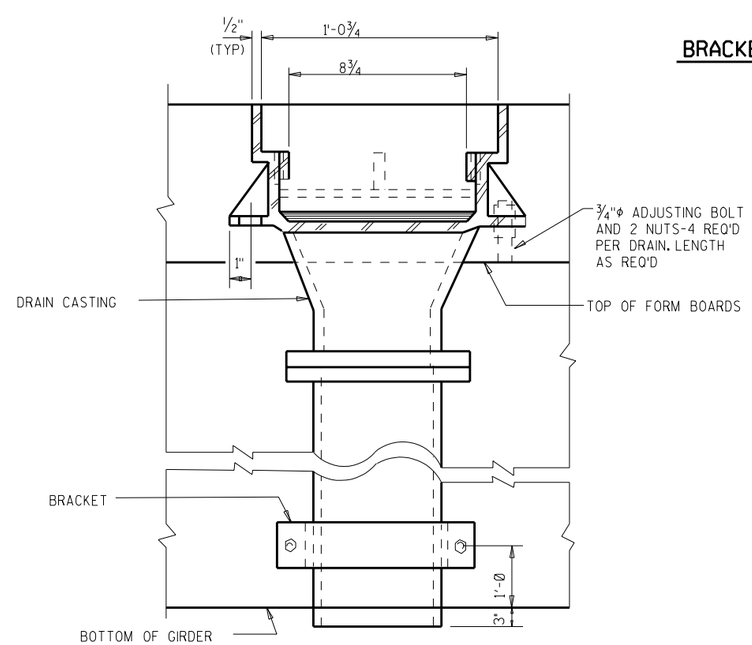

SECTION A2

NO.	DATE	REVISION	BY

STATE OF WISCONSIN
DEPARTMENT OF TRANSPORTATION
STRUCTURES DESIGN SECTION

STRUCTURE

DRAWN BY	PLANS CK'D.

FLOOR DRAIN
TYPE ' GC '

SHEET

8

FILE= DRAINGC-OUT.DGN
SCALE = :1

4/86

9-1-94