STATE PROJECT NUMBER
- -

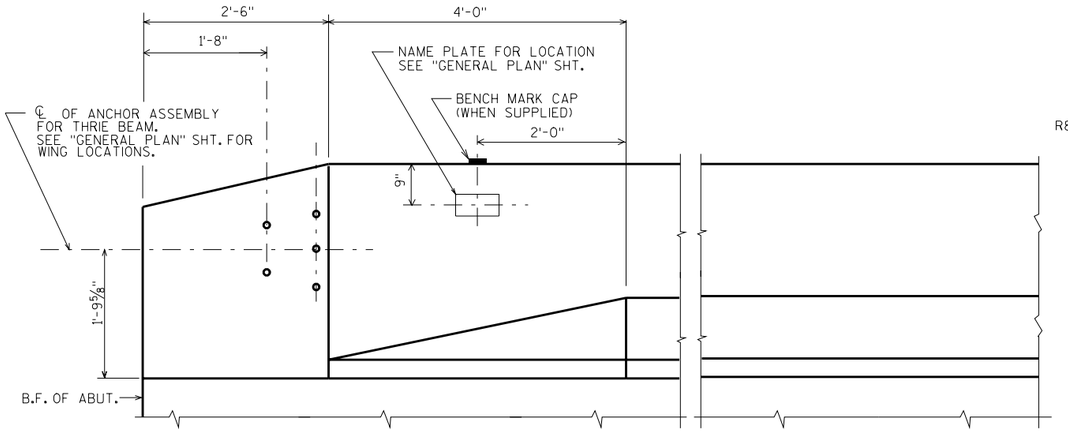

INSIDE ELEVATION

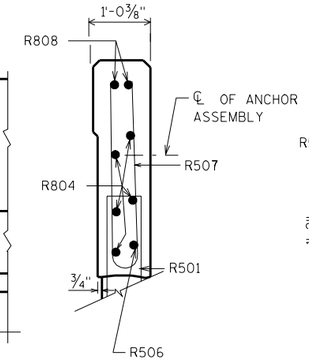

SECTION A

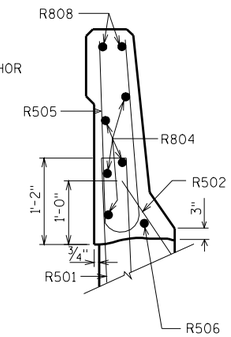

SECTION B

▲ LENGTH SHOWN FOR BAR IS AN AVERAGE LENGTH AND SHOULD ONLY BE USED FOR BAR WEIGHT CALCULATIONS. SEE BAR SERIES TABLE FOR ACTUAL LENGTHS.

BILL OF BARS

BAR MARK	COAT	NO.	LENGTH	BENT	BAR SERIES	LOCATION
R501	X		4-5	X		PARAPET VERT.
R502	X		2-4	X		PARAPET VERT.
R503	X		4-7	X		PARAPET VERT.
R804	X					PARAPET HORIZ.
R505	X		6-6	X		PARAPET VERT.
R506	X			X		PARAPET HORIZ.
R507	X		5-8	X	▲	PARAPET HORIZ.
R808	X			X		PARAPET HORIZ.

BAR SERIES TABLE

MARK	NO. REQD.	LENGTH
R507	4 SERIES OF 6	4-10 TO 6-6

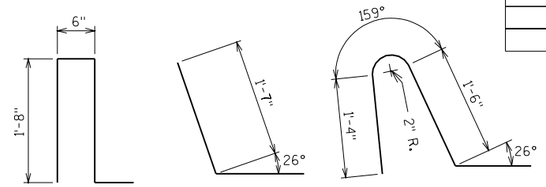

R501 R502 R503

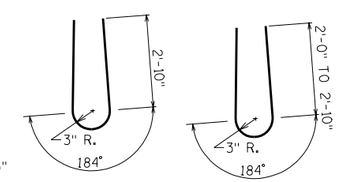

R505 R507

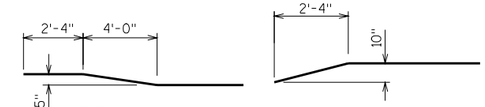

R506 R808

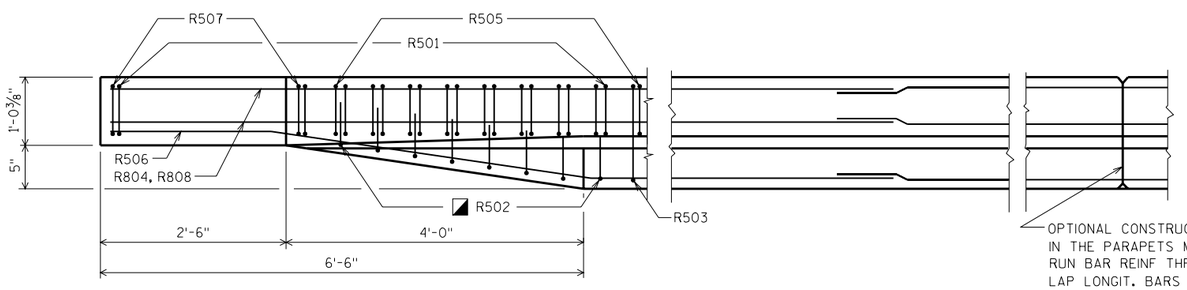

PLAN

OPTIONAL CONSTRUCTION JOINTS IN THE PARAPETS MAY BE USED. RUN BAR REINF THRU THE JOINT. LAP LONGIT. BARS A MIN. OF 3'-5" MIN. JOINT SPACING OF 80'-0" DEFINE CONST. JOINT WITH A ¾" 'V' GROOVE.

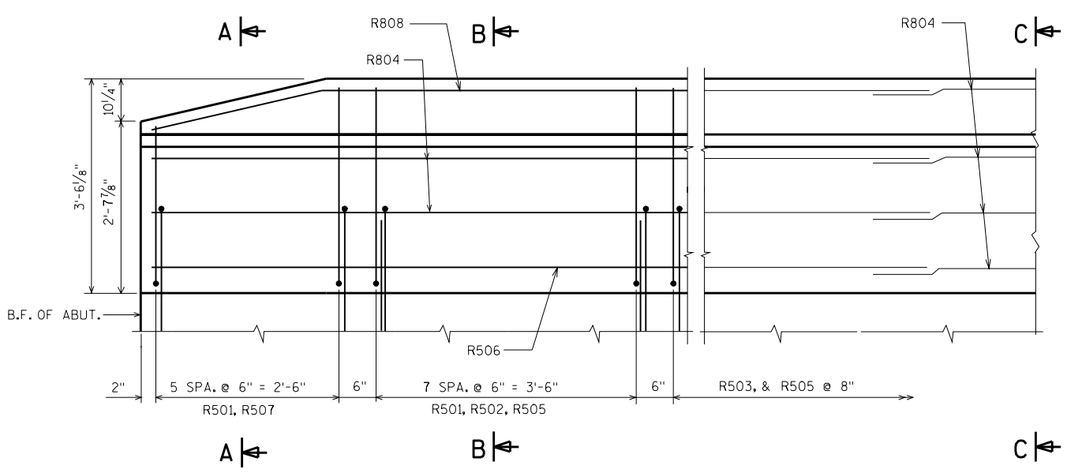

OUTSIDE ELEVATION

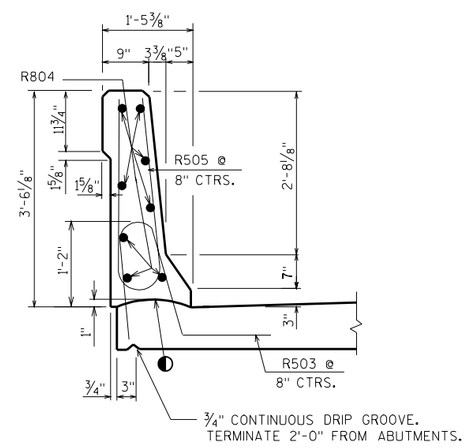

SECTION C

THREADED INSERTS FOR ⅞" Φ X 2" LONG GALVANIZED HEX. HEAD CAP SCREWS. CAP SCREWS TO BE THREADED A MIN. OF 1⅞" AND SHALL BE SUPPLIED, INCLUDING WASHERS, WITH ASSEMBLY. INSERTS TO BE THREADED A MINIMUM OF 1¾".

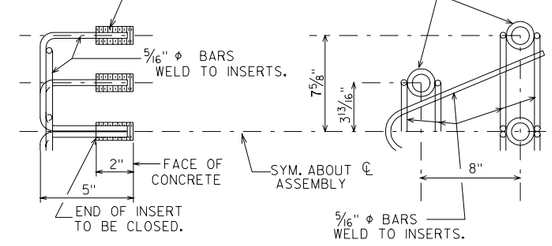

DETAIL OF ANCHOR ASSEMBLY

NOTE: HEX. HEAD CAP SCREWS & WASHERS TO BE GALVANIZED IN ACCORDANCE WITH AASHTO M232 CLASS C.

◐ CONST. JOINT - STRIKE OFF AS SHOWN

◪ USE CARE TO PLACE R502 BARS CORRECTLY ALONG TRANSITION OF PARAPET.

NO.	DATE	REVISION	BY

STATE OF WISCONSIN
DEPARTMENT OF TRANSPORTATION
STRUCTURES DESIGN SECTION

STRUCTURE

DRAWN BY	PLANS CK'D.

SLOPED FACE PARAPET "HF"

SHEET

8

8

SCALE =

HFDEC
3-06