STATE PROJECT NUMBER
- -

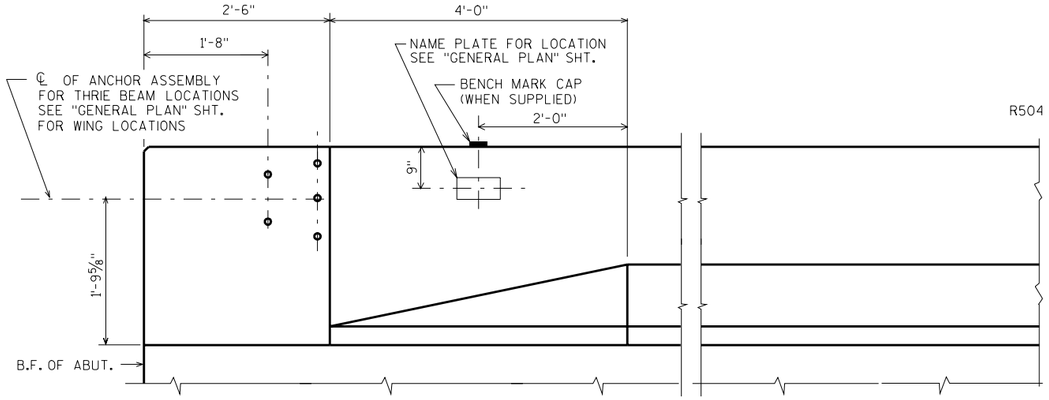

INSIDE ELEVATION

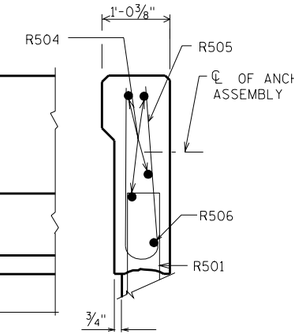

SECTION A

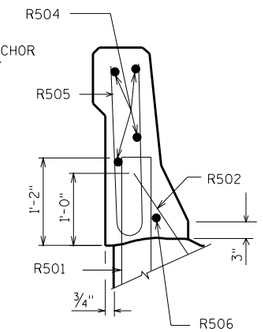

SECTION B

BILL OF BARS

BAR MARK	COAT	NO. REQ'D.	LENGTH	BENT	BAR SERIES	LOCATION
R501	X		4-5	X		PARAPET VERT.
R502	X		2-4	X		PARAPET VERT.
R503	X		4-2	X		PARAPET VERT.
R504	X					PARAPET HORIZ.
R505	X		4-10	X		PARAPET VERT.
R506	X			X		PARAPET HORIZ.

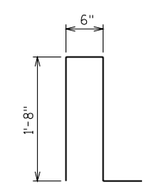

R501

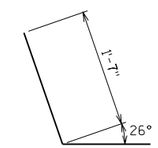

R502

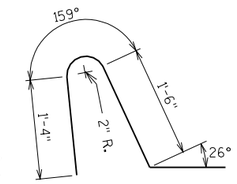

R503

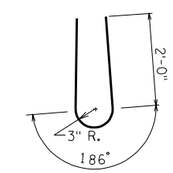

R505

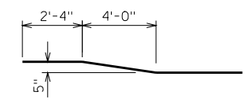

R506

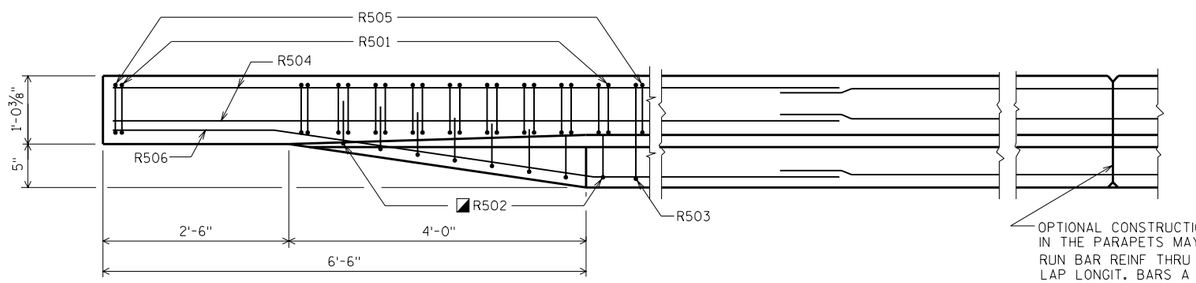

PLAN

OPTIONAL CONSTRUCTION JOINTS IN THE PARAPETS MAY BE USED. RUN BAR REINF THRU THE JOINT. LAP LONGIT. BARS A MIN. OF 1'-9" MIN. JOINT SPACING OF 80'-0" DEFINE CONST. JOINT WITH A ¾" 'V' GROOVE.

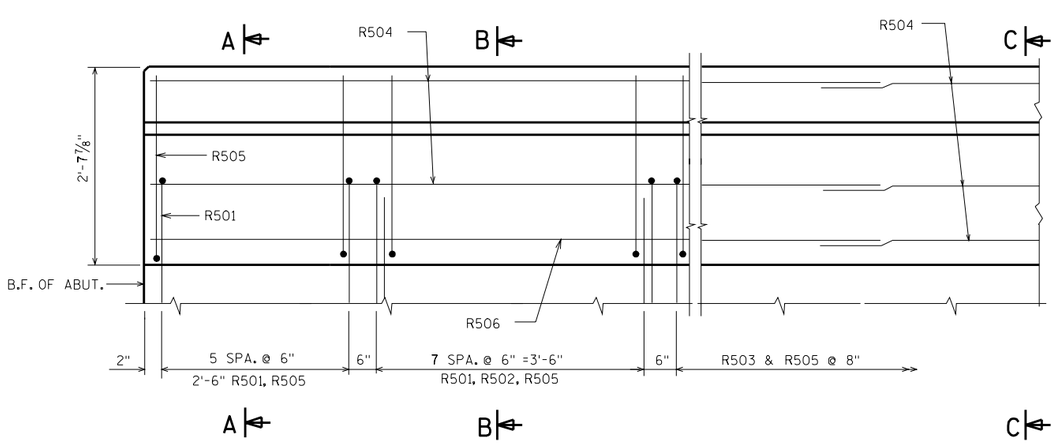

OUTSIDE ELEVATION

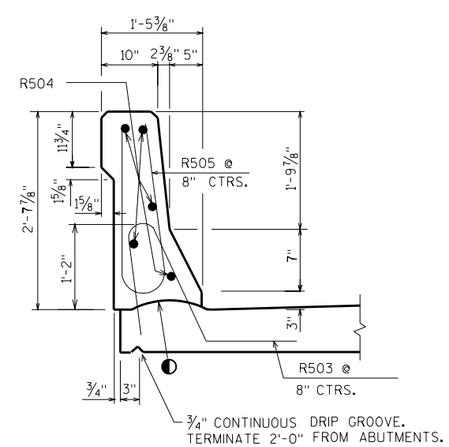

SECTION C

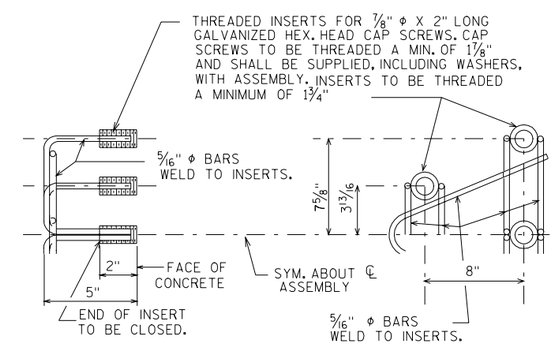

DETAIL OF ANCHOR ASSEMBLY

NOTE: HEX. HEAD CAP SCREWS & WASHERS TO BE GALVANIZED IN ACCORDANCE WITH AASHTO M232 CLASS C.

◐ CONST. JOINT - STRIKE OFF AS SHOWN.

◪ USE CARE TO PLACE R502 BARS CORRECTLY ALONG TRANSITION OF PARAPET.

NO.	DATE	REVISION	BY

STATE OF WISCONSIN
DEPARTMENT OF TRANSPORTATION
STRUCTURES DESIGN SECTION

STRUCTURE

DRAWN BY | PLANS CK'D.

SLOPED FACE PARAPET LF

SHEET

8

8

12

SCALE =

LFDEC
3-06