STATE PROJECT NUMBER
- -

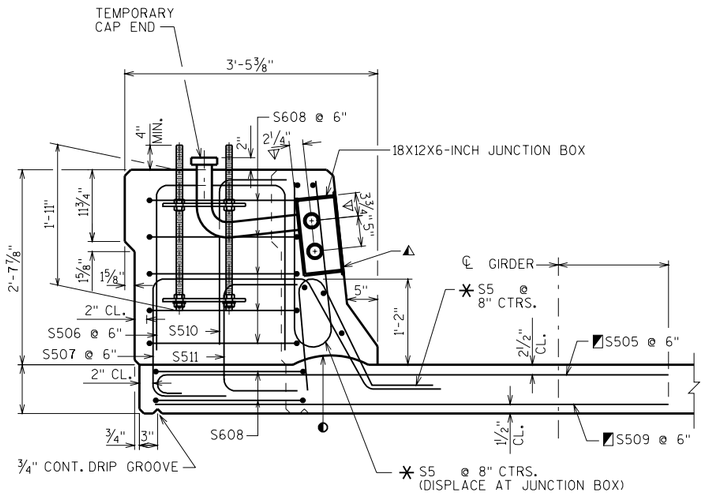

SECTION A-A

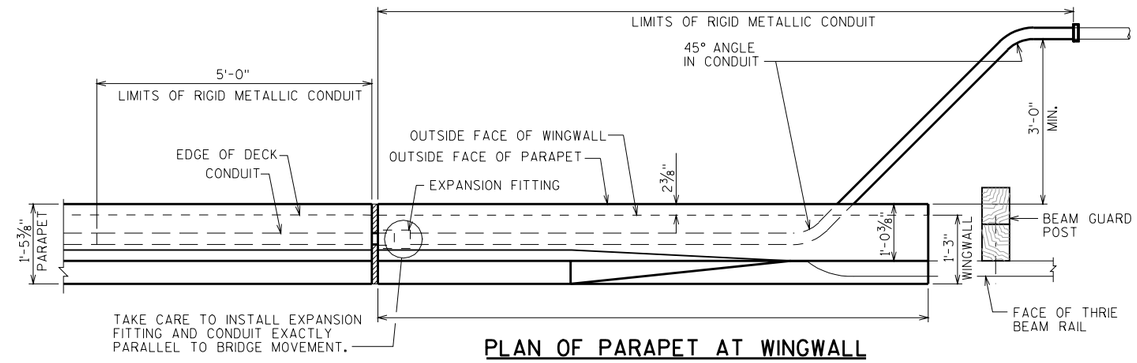

PLAN OF PARAPET AT WINGWALL

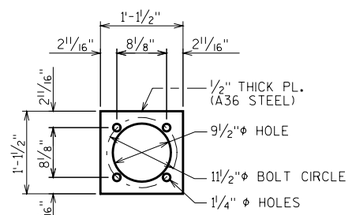

PLATE DETAIL

(REQ'D.)

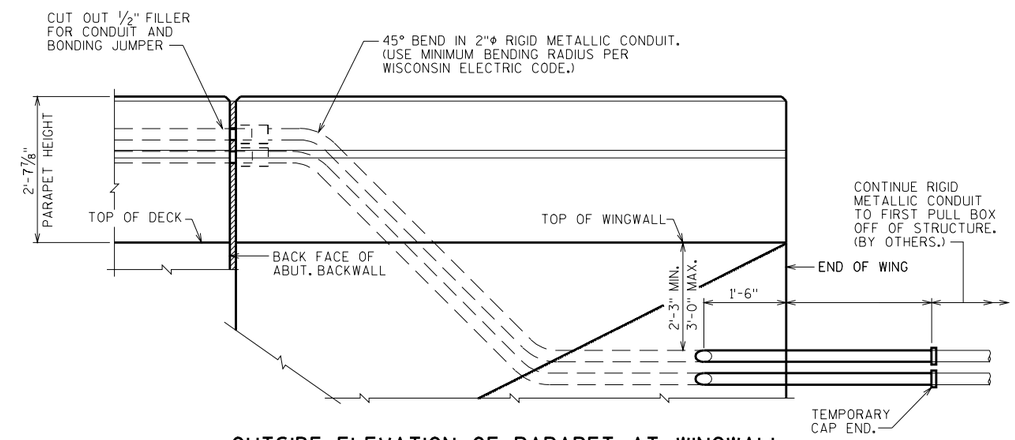

OUTSIDE ELEVATION OF PARAPET AT WINGWALL

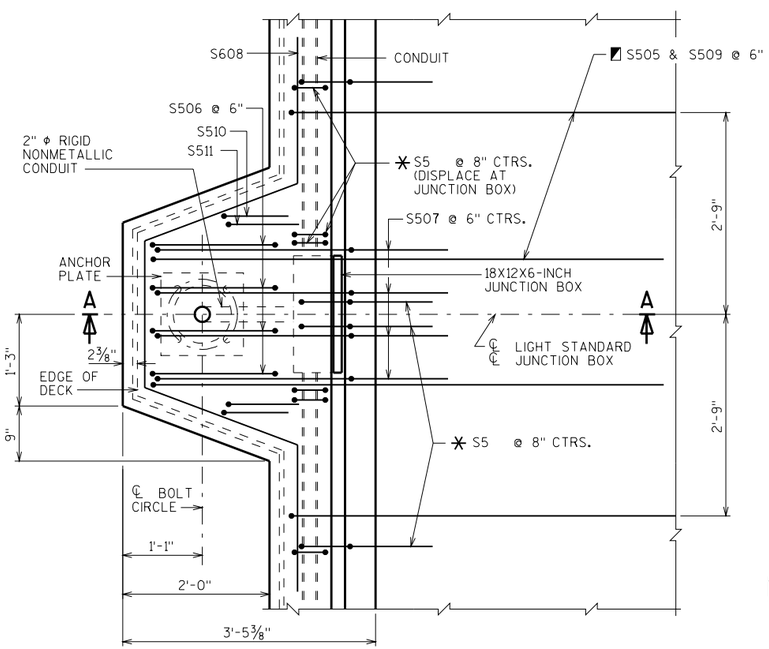

PLAN AT LIGHT STANDARD

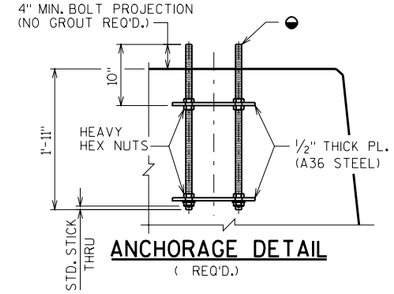

ANCHORAGE DETAIL

(REQ'D.)

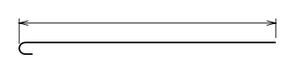

S505

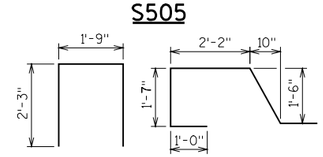

S506 S507

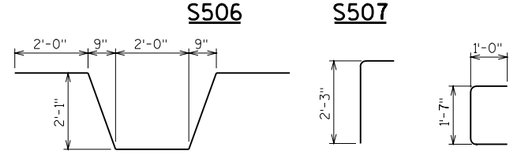

S608 S510 S511

◐ CONSTR. JT. STRIKE OFF AS SHOWN

◭ CUT OUT ± 1" OF GASKET AT BOTTOM OF JUNCTION BOX COVER TO ALLOW FOR DRAINAGE.

▽ LOCATION OF CONDUIT IS MEASURED FROM OUTSIDE EDGE OF JUNCTION BOX.

◩ THESE BARS ARE IN ADDITION TO STANDARD TRANSVERSE BARS IN DECK.

◒ 1"Φ THREADED ANCHOR BOLTS ASTM A449 OR AASHTO M 314-90 GR 55. HOT DIP ASTM A153, CLASS C, UPPER 8" OF BOLT INCLUDING NUTS & WASHERS. PROVIDE ENLARGED THREAD ON NUTS FOR PROPER FIT AFTER GALVANIZING. PROVIDE DOUBLE FLAT WASHERS & NUTS.

✳ SEE SLOPED FACE PARAPET "LF", SHT. FOR ADDITIONAL BAR STEEL DETAILS.

NOTES

BID ITEMS SHALL BE:
"JUNCTION BOXES 18X12X6-INCH", EACH.
"ANCHOR ASSEMBLIES LIGHT POLES", EACH.
"CONDUIT RIGID NONMETALLIC SCHEDULE 40 2-INCH"
"CONDUIT RIGID METALLIC 2-INCH".

APPROVED MANUFACTURERS - JUNCTION BOXES: SEE APPROVED MATERIAL LIST.

APPROVED MANUFACTURER OR EQUIVALENT - EXPANSION FITTING: O-Z/GEDNEY TYPE AX-200 AND BONDING JUMPER (4" TOTAL CONDUIT MOVEMENT).

EXPANSION FITTINGS, ANGLES AND ADAPTER FITTINGS TO BE INCIDENTAL TO "CONDUIT RIGID METALLIC 2-INCH".

WHEN CONNECTING NONMETALLIC CONDUIT TO METALLIC CONDUIT, ONLY ADAPTER FITTINGS U.L. LISTED FOR ELECTRICAL USE SHALL BE USED.

BILL OF BARS

BAR MARK	COAT	NO. REQ'D.	LENGTH	BENT	BAR SERIES	LOCATION
S505	X			X		DECK TRANSV. @ LIGHT STD.
S506	X		6-0	X		PARAPET VERT. @ LIGHT STD.
S507	X		7-0	X		PARAPET VERT. @ LIGHT STD.
S608	X		10-0	X		PARAPET HORIZ. @ LIGHT STD.
S509	X					DECK TRANSV. @ LIGHT STD.
S510	X		3-2	X		PARAPET VERT. @ LIGHT STD.
S511	X		3-5	X		PARAPET VERT. @ LIGHT STD.

NO.	DATE	REVISION	BY

STATE OF WISCONSIN
DEPARTMENT OF TRANSPORTATION
STRUCTURES DESIGN SECTION

STRUCTURE

DRAWN BY | PLANS CK'D.

PARAPET "LF" ELECTRICAL WORK

SHEET

FILE=
SCALE =

8-04

8

8