STATE PROJECT NUMBER

- -

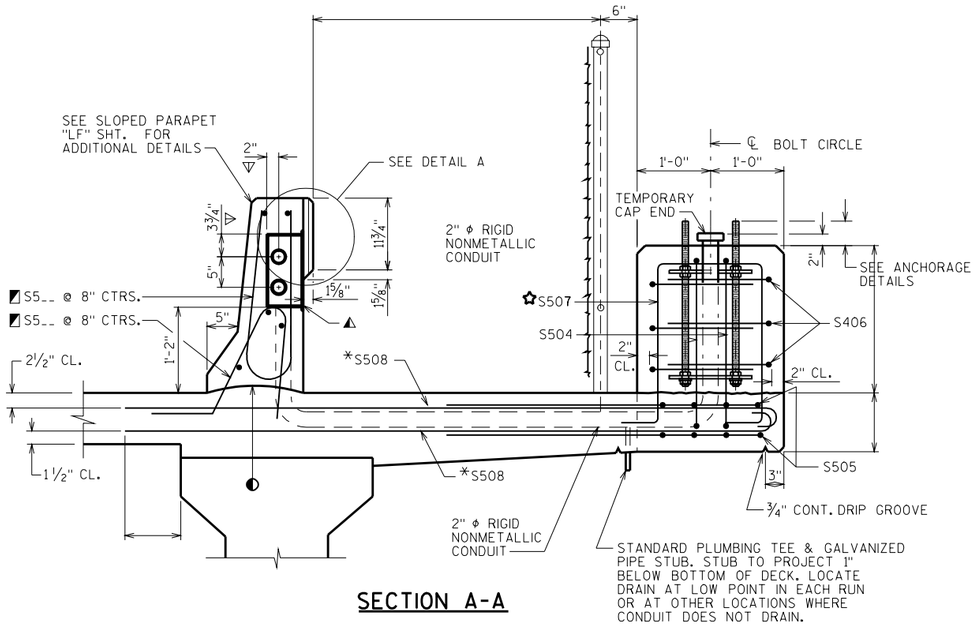

SECTION A-A

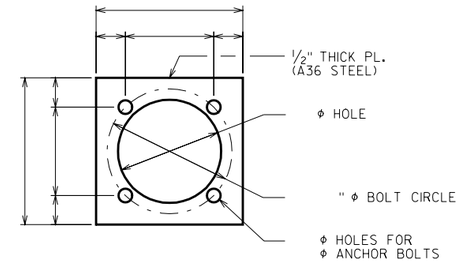

PLATE DETAIL

(REQ'D.)

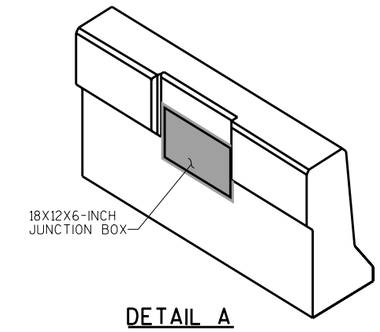

DETAIL A

SHOWING B.F. OF PARAPET WITH BLOCK OUT FOR JUNCTION BOX.

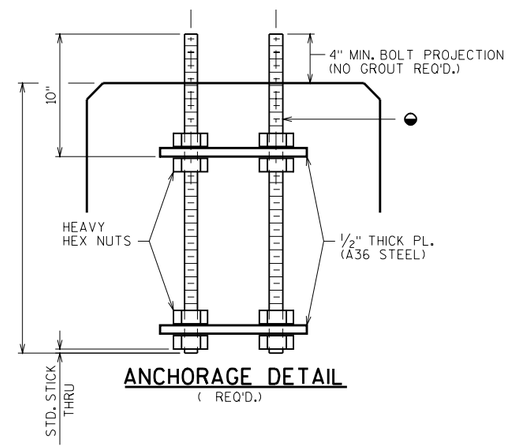

ANCHORAGE DETAIL

(REQ'D.)

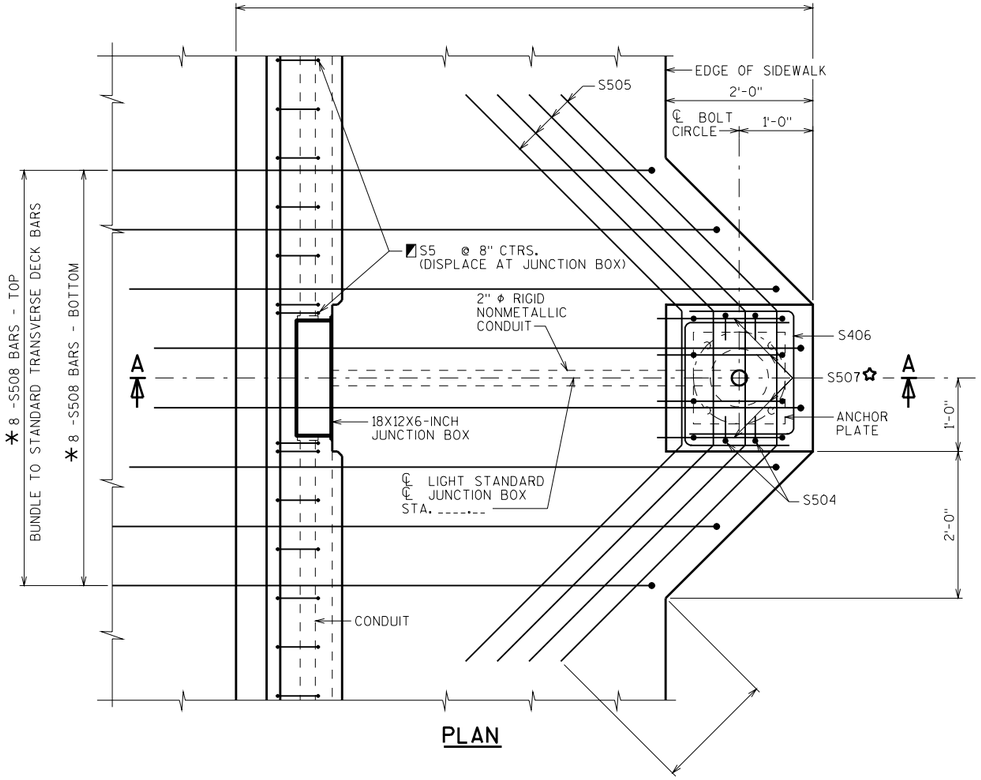

PLAN

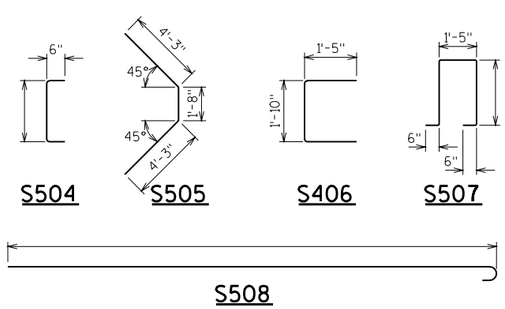

BILL OF BARS

BAR MARK	COAT	NO. REQ'D.	LENGTH	BENT	LOCATION
S504	X			X	LIGHT STD., VERT.
S505	X		10-2	X	LIGHT STD., HORIZ. IN DECK
S406	X		4-6	X	LIGHT STD., HORIZ.
S507	X			X	LIGHT STD., VERT.
S508	X			X	LIGHT STD., TRANSV. IN DECK

◐ CONSTR. JT. STRIKE OFF AS SHOWN

◭ CUT OUT ± 1" OF GASKET AT BOTTOM OF JUNCTION BOX COVER TO ALLOW FOR DRAINAGE.

▽ LOCATION OF CONDUIT IS MEASURED FROM OUTSIDE EDGE OF JUNCTION BOX.

* THESE BARS ARE IN ADDITION TO STANDARD TRANSVERSE BARS IN DECK.

◒ 1"ϕ THREADED ANCHOR BOLTS ASTM A449 OR AASHTO M 314-90 GR 55. HOT DIP ASTM A153, CLASS C, UPPER 8" OF BOLT INCLUDING NUTS & WASHERS. PROVIDE ENLARGED THREAD ON NUTS FOR PROPER FIT AFTER GALVANIZING. PROVIDE DOUBLE FLAT WASHERS & NUTS.

◪ SEE SLOPED FACE PARAPET "LF", SHT. FOR ADDITIONAL BAR STEEL DETAILS.

✿ TIE IN PLACE AFTER ANCHOR BOLT ASSEMBLY LOCATED.

NOTES

BID ITEM SHALL BE:
"ANCHOR ASSEMBLIES LIGHT POLES" EACH

SEE SHT. FOR
- ADDITIONAL NOTES
- END OF BRIDGE DETAILS

NO.	DATE	REVISION	BY

STATE OF WISCONSIN
DEPARTMENT OF TRANSPORTATION
STRUCTURES DESIGN SECTION

STRUCTURE

DRAWN BY | PLANS CK'D.

LIGHTING DETAIL

SHEET

8

8

SCALE =

LIGHTDET
9-04