STATE PROJECT NUMBER
- -

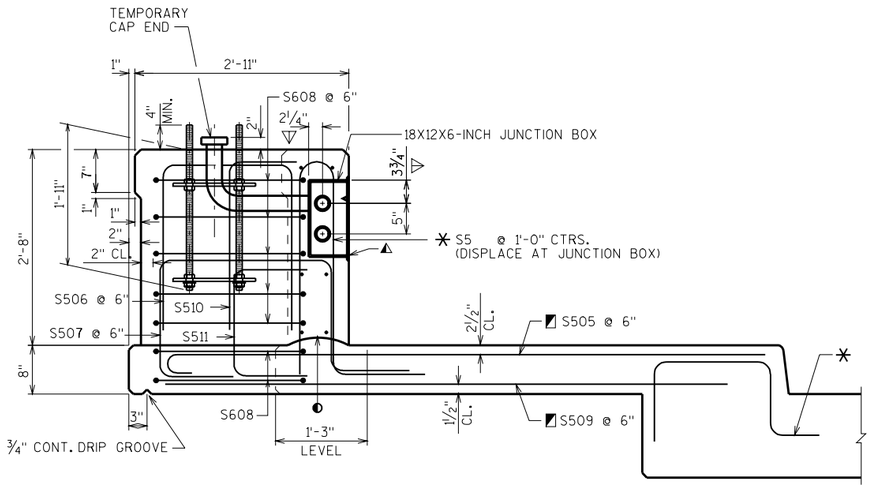

SECTION A-A

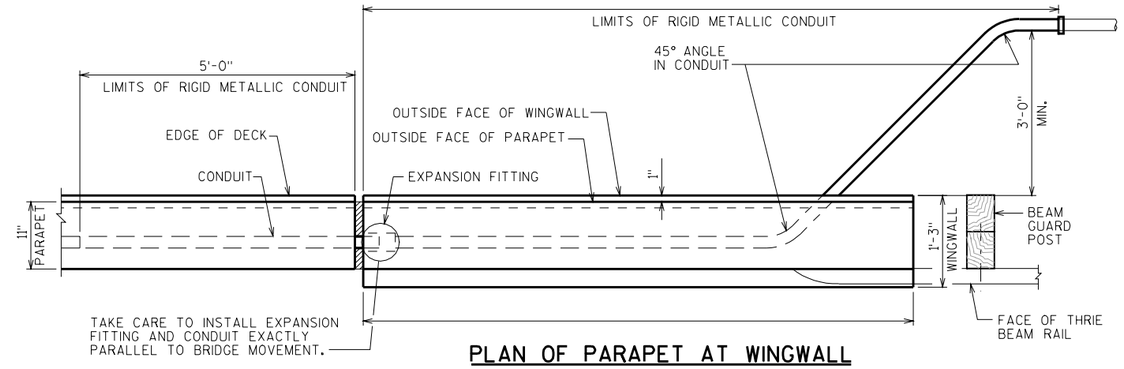

PLAN OF PARAPET AT WINGWALL

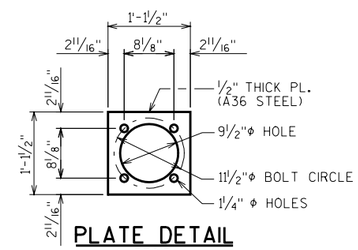

PLATE DETAIL

(REQ'D.)

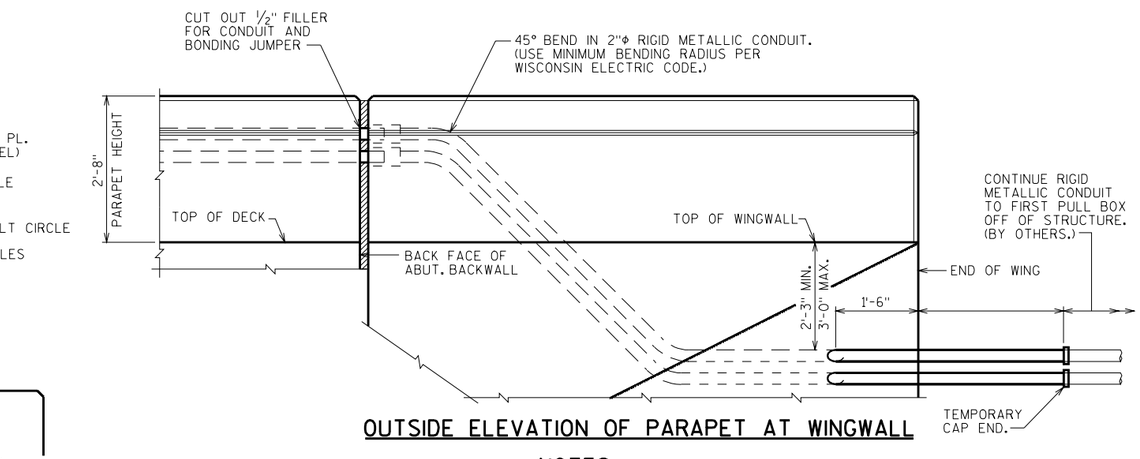

OUTSIDE ELEVATION OF PARAPET AT WINGWALL

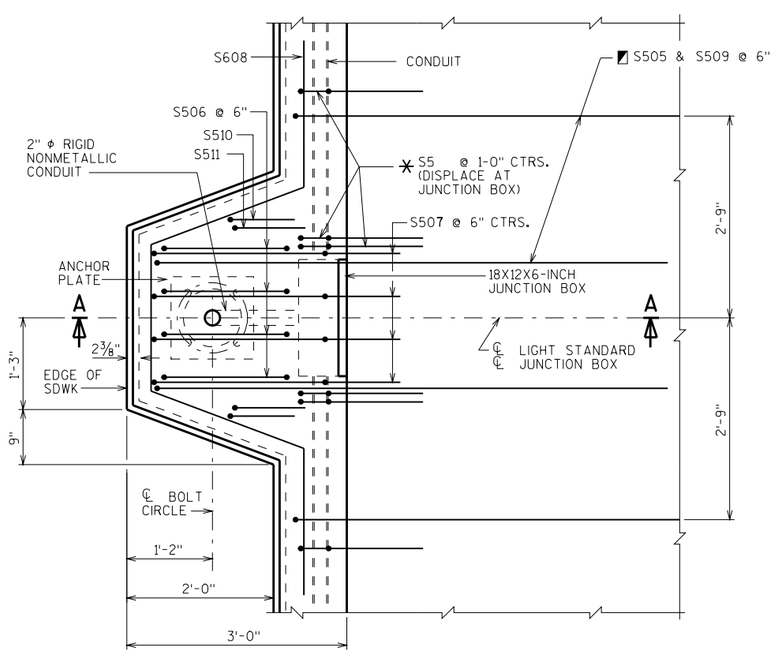

PLAN AT LIGHT STANDARD

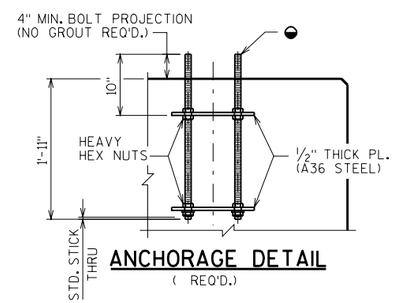

ANCHORAGE DETAIL

(REQ'D.)

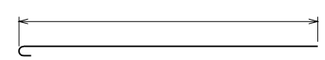

S505

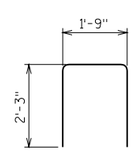

S506

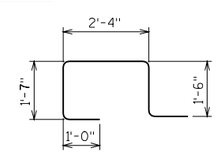

S507

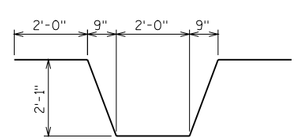

S608

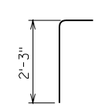

S510

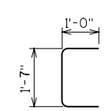

S511

◐ CONSTR. JT. STRIKE OFF AS SHOWN

◭ CUT OUT ± 1" OF GASKET AT BOTTOM OF JUNCTION BOX COVER TO ALLOW FOR DRAINAGE.

▽ LOCATION OF CONDUIT IS MEASURED FROM OUTSIDE EDGE OF JUNCTION BOX.

◪ THESE BARS ARE IN ADDITION TO STANDARD TRANSVERSE BARS IN SIDEWALK.

◒ 1"Φ THREADED ANCHOR BOLTS ASTM A449 OR AASHTO M 314-90 GR 55. HOT DIP ASTM A153, CLASS C, UPPER 8" OF BOLT INCLUDING NUTS & WASHERS. PROVIDE ENLARGED THREAD ON NUTS FOR PROPER FIT AFTER GALVANIZING. PROVIDE DOUBLE FLAT WASHERS & NUTS.

✳ SEE VERTICAL FACE PARAPET "A", SHT. FOR ADDITIONAL BAR STEEL DETAILS.

NOTES

BID ITEMS SHALL BE:
"JUNCTION BOXES 18X12X6-INCH", EACH.
"ANCHOR ASSEMBLIES LIGHT POLES", EACH.
"CONDUIT RIGID NONMETALLIC SCHEDULE 40 2-INCH"
"CONDUIT RIGID METALLIC 2-INCH".

APPROVED MANUFACTURERS - JUNCTION BOXES:
SEE APPROVED MATERIAL LIST.

APPROVED MANUFACTURER OR EQUIVALENT - EXPANSION FITTING:
O-Z/GEDNEY TYPE AX-200 AND BONDING JUMPER (4" TOTAL CONDUIT MOVEMENT).

EXPANSION FITTINGS, ANGLES AND ADAPTER FITTINGS TO BE INCIDENTAL TO "CONDUIT RIGID METALLIC 2-INCH".

WHEN CONNECTING NONMETALLIC CONDUIT TO METALLIC CONDUIT, ONLY ADAPTER FITTINGS U.L. LISTED FOR ELECTRICAL USE SHALL BE USED.

BILL OF BARS

BAR MARK	COAT	NO. REQ'D.	LENGTH	BENT	LOCATION
S505	X			X	SIDEWALK HORIZ. @ JUNCTION BOX
S506	X		6-0	X	PARAPET VERT. @ JUNCTION BOX
S507	X		6-11	X	PARAPET VERT. @ LIGHT STD.
S608	X		10-0	X	PARAPET HORIZ. @ LIGHT STD.
S509	X			X	SIDEWALK HORIZ. @ JUNCTION BOX
S510	X		3-2	X	PARAPET VERT. @ LIGHT STD.
S511	X		3-5	X	PARAPET VERT. @ LIGHT STD.

NO.	DATE	REVISION	BY

STATE OF WISCONSIN
DEPARTMENT OF TRANSPORTATION
STRUCTURES DESIGN SECTION

STRUCTURE

DRAWN BY | PLANS CK'D.

PARAPET "A" ELECTRICAL WORK

SHEET

FILE=
SCALE =

8-04