STATE PROJECT NUMBER

- -

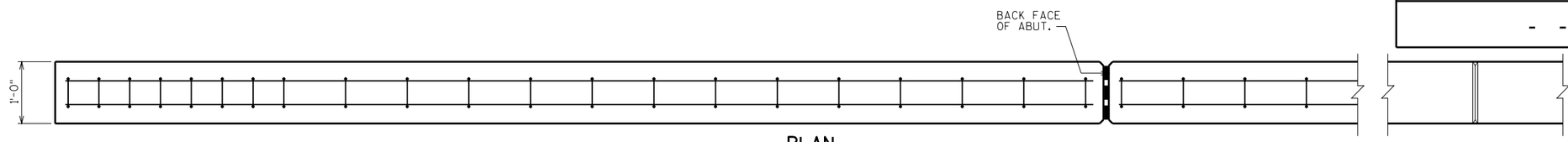

PLAN

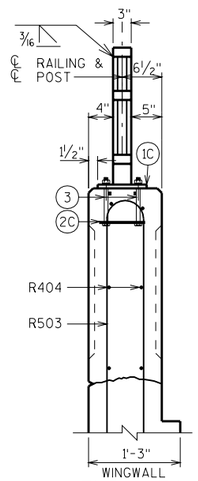

END VIEW

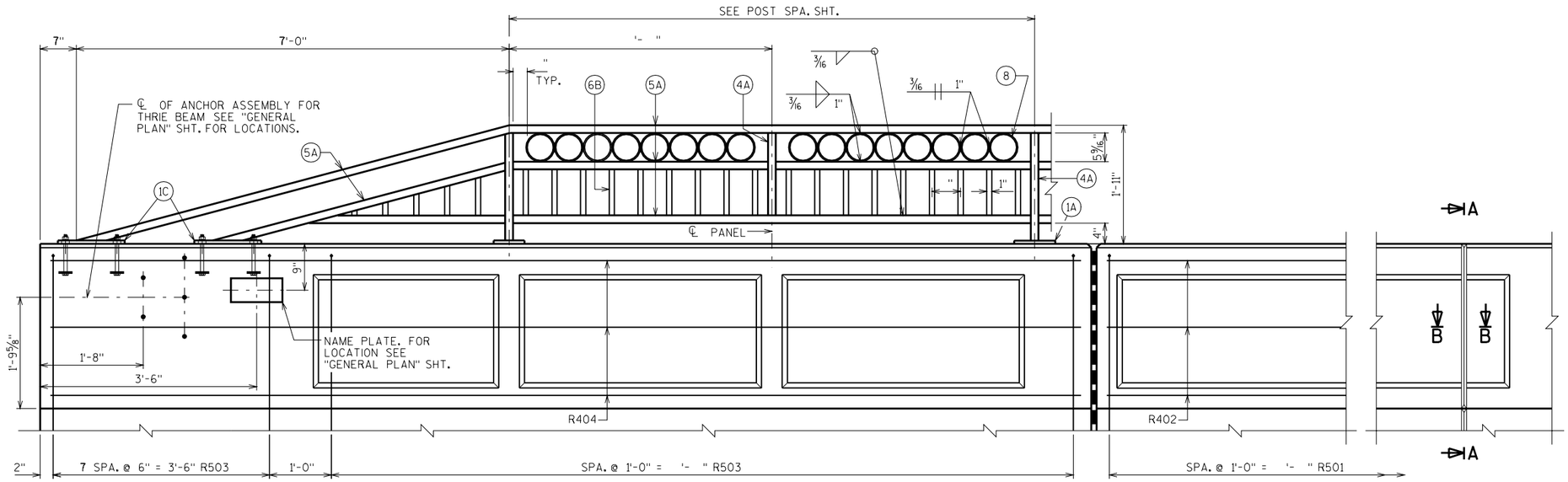

ELEVATION OF PARAPET

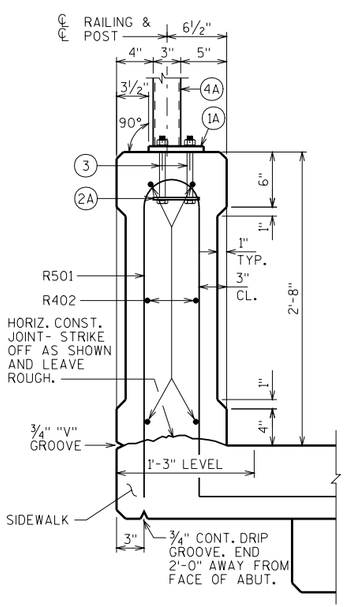

SECTION THRU PARAPET ON BRIDGE

* ADJUST LOCATIONS OF BARS TO ALLOW PLACEMENT OF ANCHOR ASSEMBLY FOR RAILING AND BEAM GUARD.

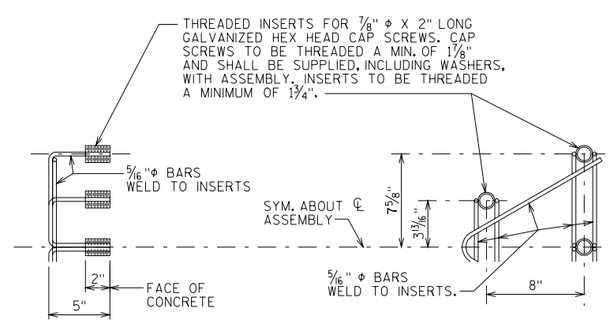

DETAIL OF ANCHOR ASSEMBLY

NOTE: HEX HEAD CAP SCREWS & WASHERS TO BE GALVANIZED IN ACCORDANCE WITH AASHTO M232 CLASS C.

ASSEMBLY SHALL BE BID ITEM "ANCHOR ASSEMBLIES FOR STEEL PLATE BEAM GUARD", EACH.

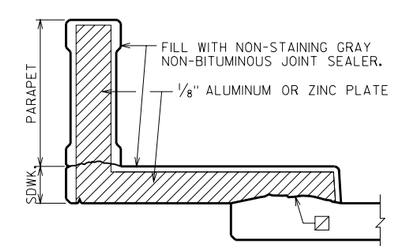

SECTION A-A

(SHOWING DEFLECTION JOINT IN PARAPET AND SIDEWALK.)

WHEN PARAPETS ARE POURED CONTINUOUSLY FROM END TO END, THEY SHALL BE SEPARATED AT THE DEFLECTION JOINTS BY A PIECE OF 1/8" ZINC OR ALUMINUM PLATE CUT AS SHOWN IN SECTION A-A BY SHADED AREA. IF CONSTRUCTION JOINTS IN PARAPETS ARE USED AT THE DEFLECTION JOINTS, ONE SIDE OF JOINT SHALL BE COATED WITH BITUMINOUS PAINT AND PLATE SEPARATORS MAY BE OMITTED.

☒ HORIZ. CONST. JOINT - STRIKE OFF AS SHOWN AND LEAVE ROUGH.

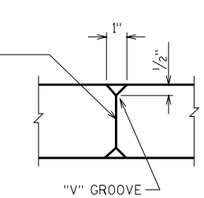

SECTION B-B

NO.	DATE	REVISION	BY

STATE OF WISCONSIN
DEPARTMENT OF TRANSPORTATION
STRUCTURES DESIGN SECTION

STRUCTURE

DRAWN BY | PLANS CK'D.

COMBINATION RAIL TYPE "C1"

SHEET

8

8

11 12

1 2 3 4 5

FILE= RAILCOMB.DGN
SCALE = 1.000

6-04