| STATE PROJECT NUMBER |
|---|
| - - |

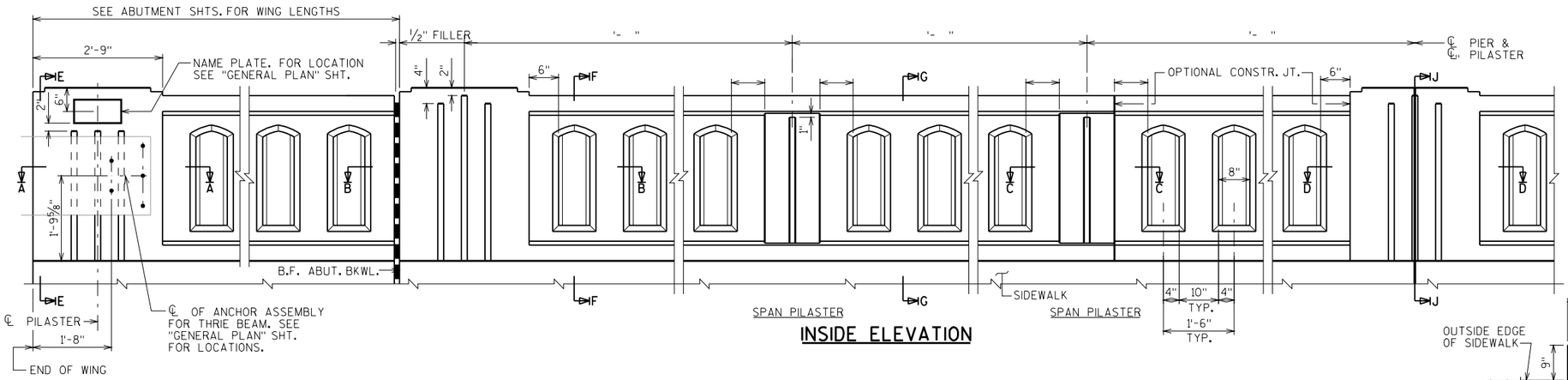


INSIDE ELEVATION

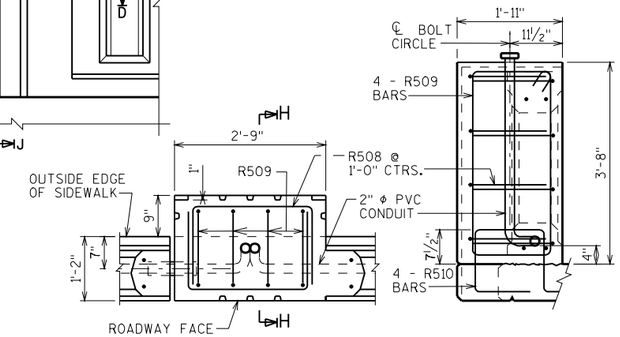


PLAN

SECTION H-H

LIGHT STANDARD

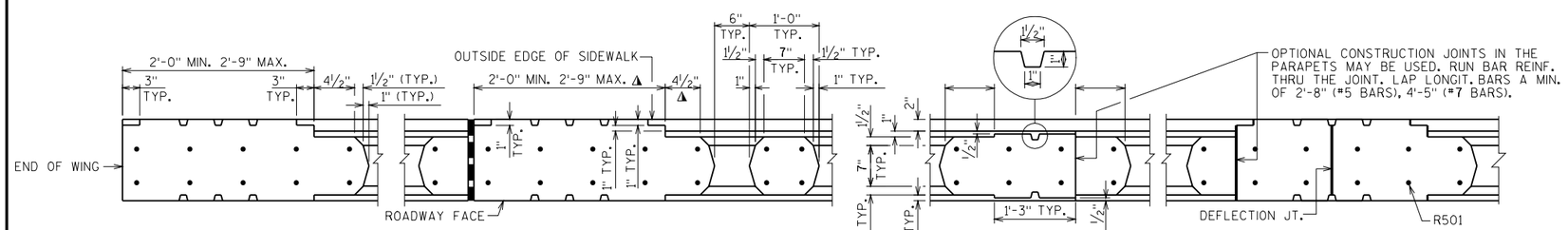


SECTION A-A

SECTION B-B

SECTION C-C

SECTION D-D

## BILL OF BARS

| BAR MARK | COAT | NO. REQ'D. | LENGTH | BENT | LOCATION |
|---|---|---|---|---|---|
| R501 | X | | 8-6 | X | PARAPET VERT. |
| R502 | X | | 3-4 | X | PARAPET VERT. |
| R503 | X | | | | PARAPET HORIZ. BOT. |
| R704 | X | | | | PARAPET HORIZ. TOP |
| R505 | X | | 4-4 | X | PARAPET VERT. @ WINGS |
| R506 | X | | | | PARAPET HORIZ. BOT. @ WINGS |
| R707 | X | | | | PARAPET HORIZ. TOP @ WING |
| R508 | X | | 4-9 | X | PARAPET HORIZ. @ LIGHT STD. |
| R509 | X | | 9-6 | X | PARAPET VERT. @ LIGHT STD. |
| R510 | X | | 4-9 | X | PARAPET VERT. @ LIGHT STD. |

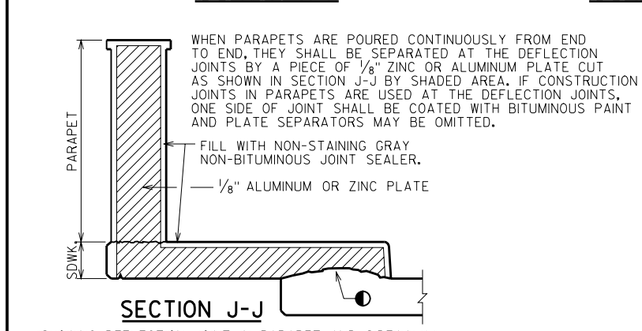


SECTION J-J

(SHOWING DEFLECTION JOINT IN PARAPET AND SIDEWALK.)

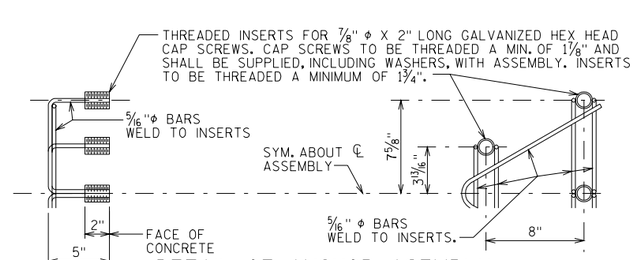


DETAIL OF ANCHOR ASEMBLY

NOTE: HEX HEAD CAP SCREWS & WASHERS TO BE GALVANIZED IN ACCORDANCE WITH AASHTO M232 CLASS C.

ASSEMBLY SHALL BE BID ITEM "ANCHOR ASSEMBLY FOR BEAM GUARD", EACH.

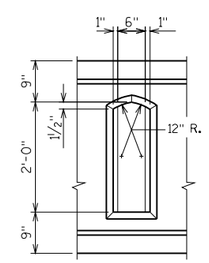


WINDOW DETAILS

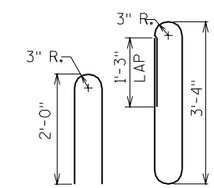


R505 R501

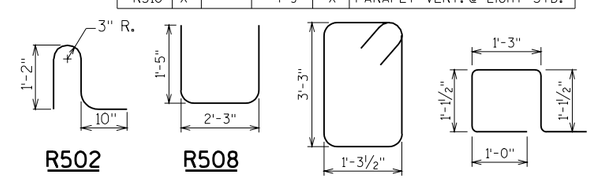


R502 R508 R509 R510

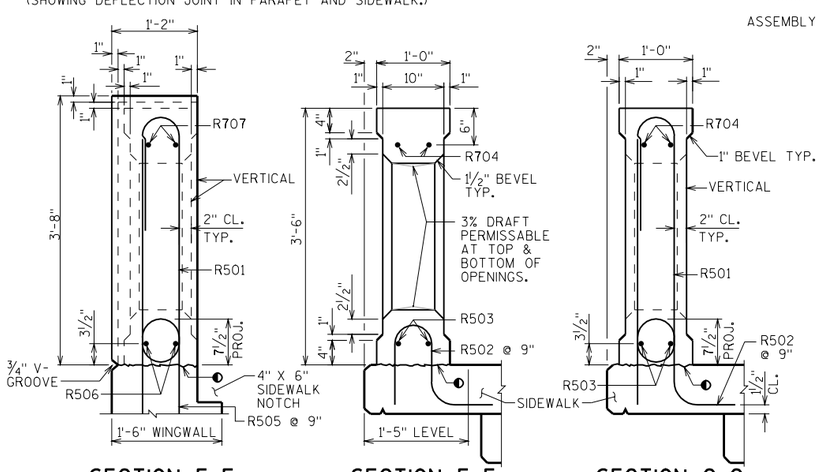


SECTION E-E

SECTION F-F

SECTION G-G

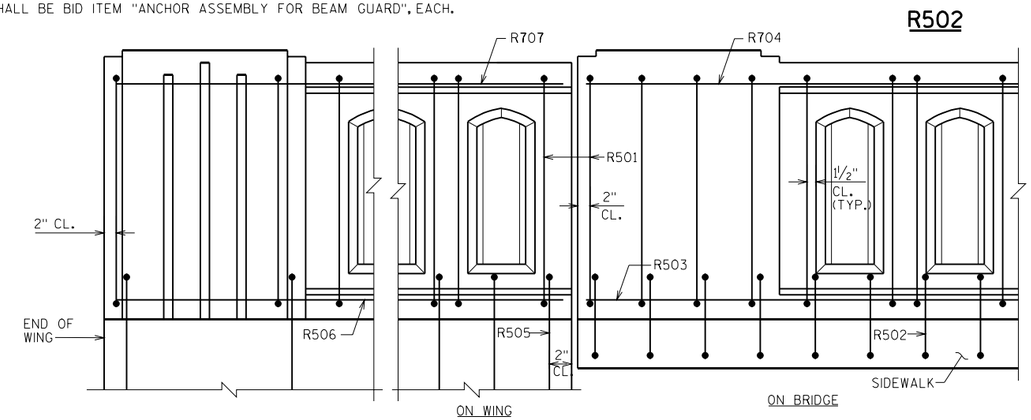


OUTSIDE ELEVATION SHOWING TYPICAL REINFORCEMENT PLACEMENT

## NOTES

BID ITEM SHALL BE "VERTICAL FACE PARAPET TYPE 'TX'", WHICH SHALL INCLUDE ALL ITEMS SHOWN.

◐ HORIZ. CONST. JOINT - STRIKE OFF AS SHOWN AND LEAVE ROUGH.

| NO. | DATE | REVISION | BY |
|---|---|---|---|
| | | | |

STATE OF WISCONSIN
DEPARTMENT OF TRANSPORTATION
STRUCTURES DESIGN SECTION

STRUCTURE

DRAWN BY | PLANS CK'D.

VERTICAL FACE PARAPET 'TX'

SHEET

FILE= RAIL TEX.DGN
SCALE =

7-04

8

8