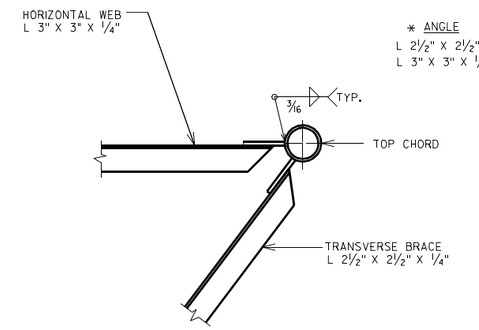

* ANGLE	WELD LENGTH (MIN.)
L 2 1/2" X 2 1/2" X 1/4"	7"
L 3" X 3" X 1/4"	8"

SECTION B-B

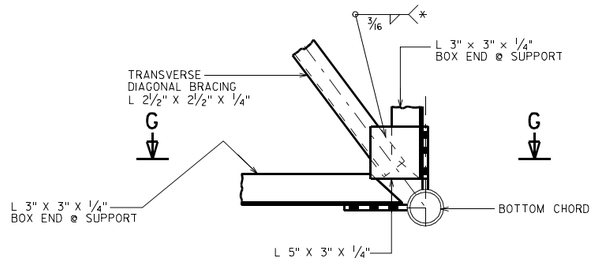

SECTION H-H

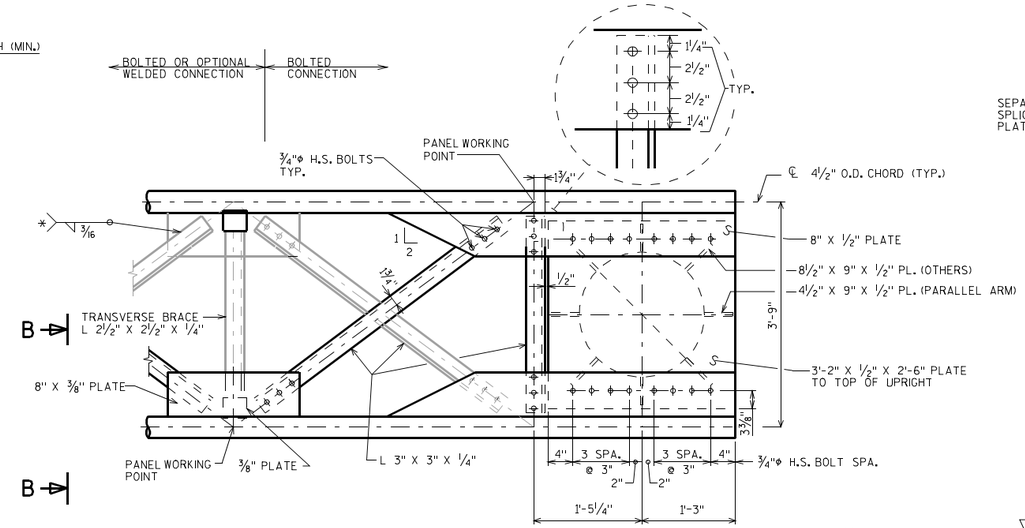

PLAN TRUSS TO UPRIGHT

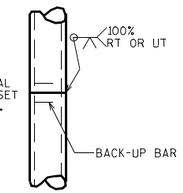

OPTIONAL COLUMN OR CHORD SPLICE DETAIL

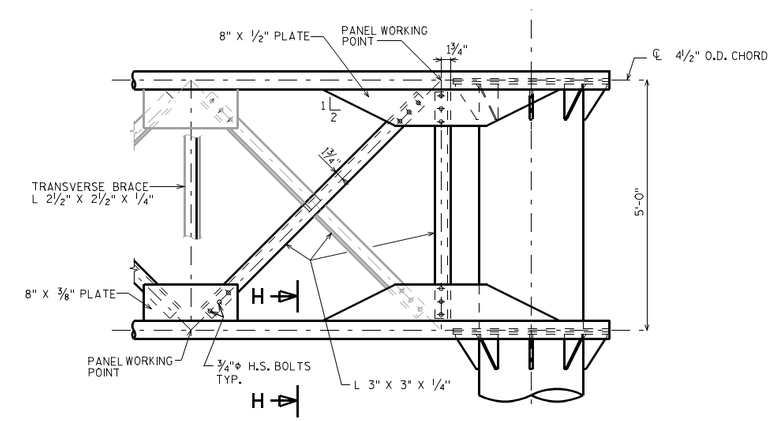

ELEVATION TRUSS TO UPRIGHT

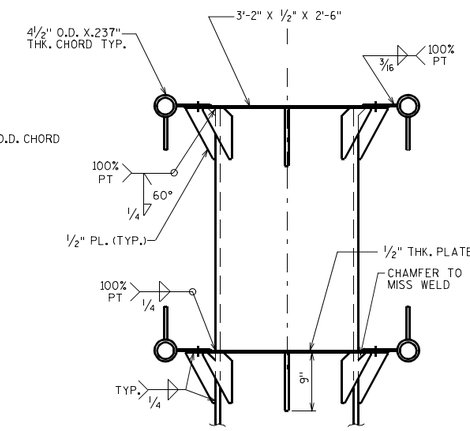

END VIEW TRUSS TO UPRIGHT

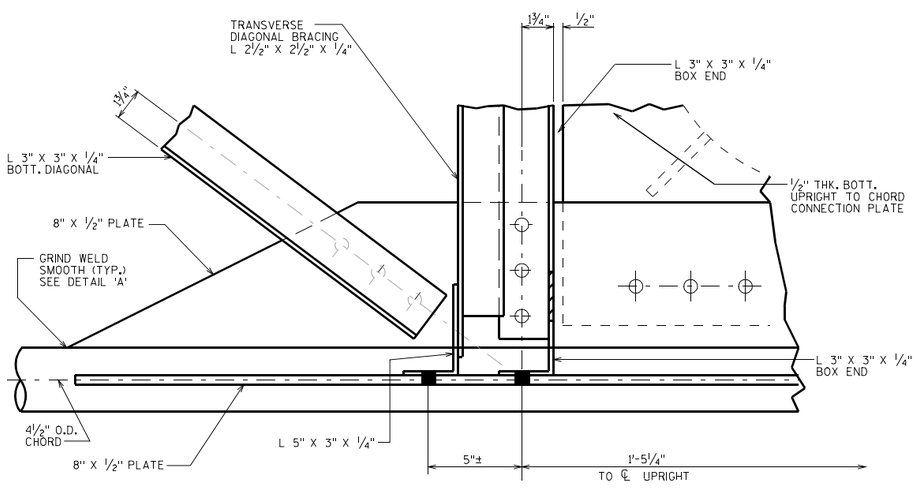

SECTION G-G

(LOOKING DOWN @ BOTT. HORIZ. PLANE @ FRONT CHORD)

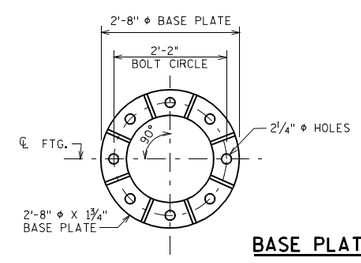

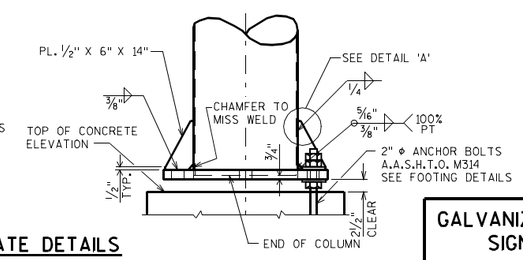

BASE PLATE DETAILS

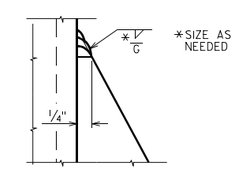

DETAIL 'A'

GALVANIZED STEEL CANTILEVER SIGN TRUSS DETAILS

STATE OF WISCONSIN
DEPARTMENT OF TRANSPORTATION
STRUCTURES DEVELOPMENT SECTION

APPROVED: _____ DATE: 12-06

STANDARD 39.11